258810

KARATE CHAMP™

INSTALLATION INSTRUCTIONS

DATA EAST USA, INC.

470 Gianni Street, Santa Clara, CA 95050
Telephone: (408) 727-4490
Toll Free: (800) 538-5129
Telex: 172163 DATA EAST SNTA

WARNING

This equipment generates and uses radio frequency energy and if not installed and used properly, i.e., in strict accordance with the instructions manual, may cause harmful interference to radio communications. It has been tested and found to comply with the limits for a Class A computing device persuant to Subpart J of Part 15 of FCC Rules, which are designed to provide reasonable protection against such interference when operated in a commercial environment.

Operation of this equipment in a residential area is likely to cause interference in which case the user at his own expense will be required to take whatever measures may be required to correct the interference.

CAUTION

EMI Shield must be securely installed in order to protect against undesirable radio interference.

K A R A T E C H A M P tm

TABLE OF CONTENTS

PAGE	
1	Game Sequence Joystick Movements
2	Option Switch Settings
3	Volume control and Dip Switch Locations
4	Major Cabinet Component Locations
5	Power Supply Requirements Operating Environment Raster Scan Monitor Signals
6	Main Wiring Harness PCB Terminations
7	Monitor Drive Circuit
8	Coin Counter Circuit Coin Counter Drive Circuit
9	Sanken SWS-60B Power Supply
10	KAGA KGD23S Mk II Power supply
13+	Schematic Package, DFV-1 PCB (9 pages) Schematic Package, DFV-2 PCB (12 pages)

*

K A R A T E C H A M P

*

GAME SEQUENCE

1. Insert coin(s).
2. Push 1P (or 2P) button.
3. KARATE skill practice - follow arrow instructions at bottom of screen. Immitate these moves to score bonus points and to practice skills.
4. DOJO - White player - Red opponent. Use your best KARATE skills to beat the opponent within the time limit. Two (2) full points lead you to the next match.
5. HARD PRACTICE - Avoid or destroy flying objects to gain bonus points.
6. NATIONAL CHAMPIONSHIP - Point system is the same as DOJO. Win two matches and you progress to the next grade (level). After each match, a bonus stage will appear.

JOYSTICK MOVEMENTS

KARATE CHAMP is a two joystick game!

* Use left lever to control white player movement (foreward, back, jump, duck).
* Use Right lever for different skills (punch, kick, sweep, etc.).
* Use combinations of left and right levers to your advantage for high score and exciting moves.
* Be sure to hold the levers until your point is scored.
* Distance to the opponent sometimes alters skill.

RIGHT LEVER / LEFT LEVER					
		BACK KICK	FRONT KICK MIDDLE REVERSE PUNCH	ROUND KICK	LOW KICK
	WITHDRAW BLOCK	BACK KICK	BACK ROUND KICK	UPPER PUNCH	LOW KICK
	FORWARD	CHANGE DIRECTION BACK KICK	MIDDLE LUNGE PUNCH FRONT KICK	UPPER LUNGE PUNCH ROUND KICK	LOW KICK
	JUMP	JUMPING BACK KICK	JUMPING SIDE KICK	BACKWARD SOMERSAULT	FORWARD SOMERSAULT
	SQUAT	BACK FOOT SWEEP	FRONT FOOT SWEEP	SQUATTING REVERSE LUNGE PUNCH	FRONT FOOT SWEEP

*

K A R A T E C H A M P

OPTION SWITCH SETTINGS

*

No.	SETTING				REMARKS
1	OFF TABLE	ON UPRIGHT			TYPE OF MACHINE
2	OFF NO	ON YES			SOUND DURING ATTRACT MODE
3	OFF NO	ON YES			FREE PLAY
4	OFF EASY	ON DIFFICULT			CLASS
5 6	OFF OFF	OFF ON	ON OFF	ON ON	LEFT Coin Acceptor
	1 Coin 1 Play	1 Coin 2 Play	2 Coin 1Play	3 Coin 1 Play	
7 8	OFF OFF	OFF ON	ON OFF	ON ON	RIGHT Coin Acceptor
	1 Coin 1 Play	1 Coin 2 Play	2 Coin 1 Play	3 Coin 1 Play	

VOLUME CONTROL AND DIP SWITCH LOCATIONS

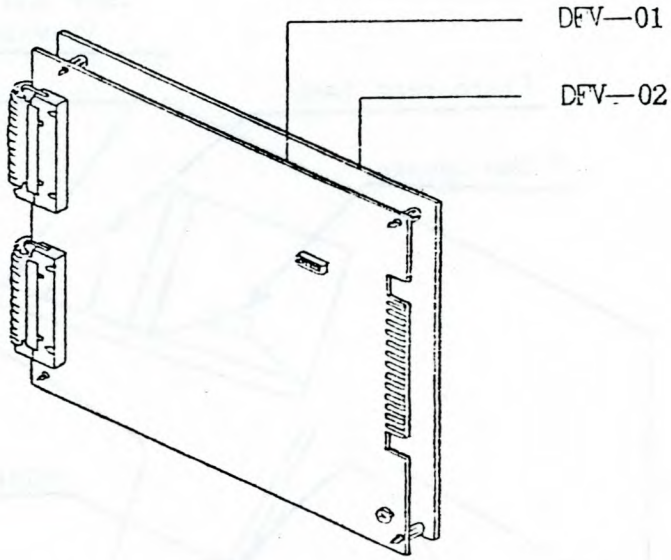

CONNECTOR DFV—01 CR7E—44DE—3.96E (CN—3)

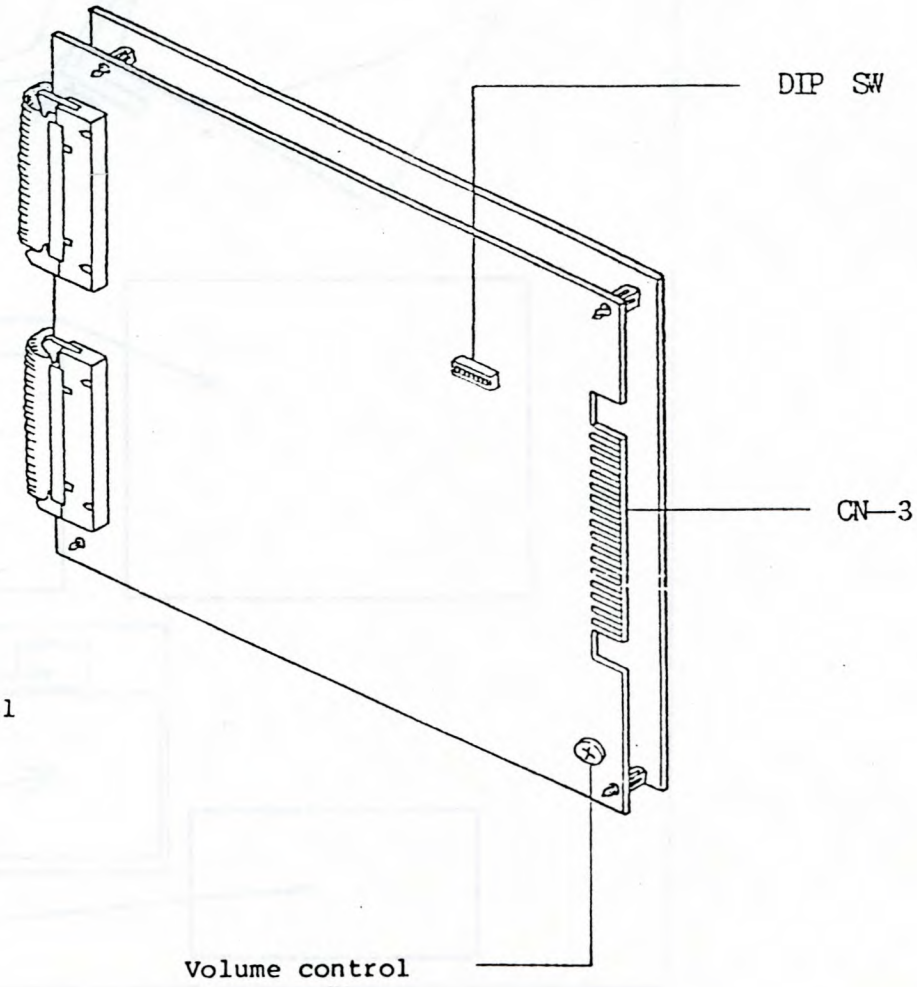

MAJOR CABINET COMPONENT LOCATIONS

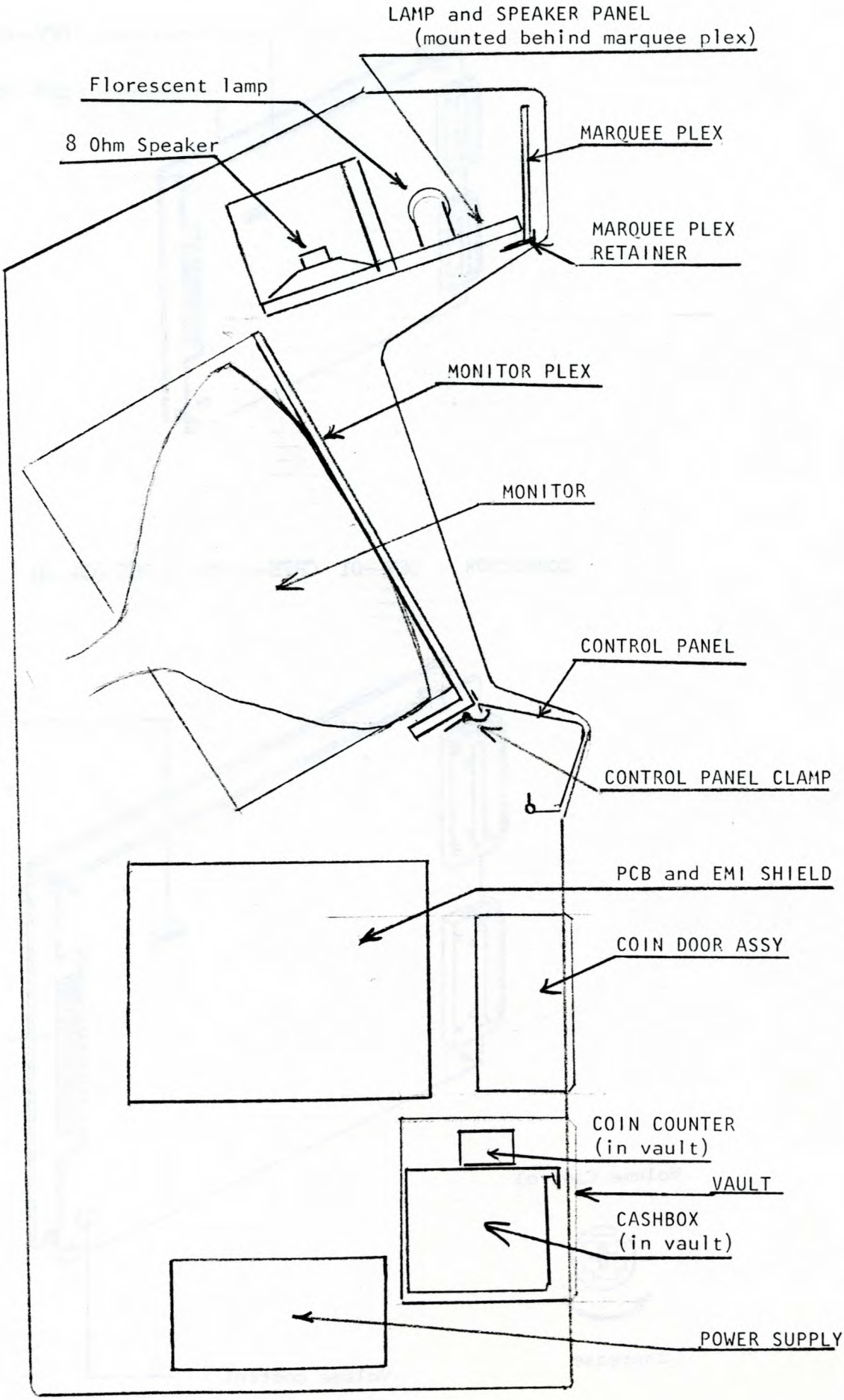

POWER SUPPLY REQUIREMENTS

+5V	±2%	5A
+12V	±2%	1A
—5V	±2%	0.1A

OPERATING ENVIRONMENT

	Temperature	Humidity
Operation	5~35° C	20~80%
Storage	—15~65° C	10~90%

RASTER SCAN MONITOR SIGNALS

(1) Color Signals R.G.B. Separate

Black 0 - +2V

Image Signal +2.5V - +4V

(2) Syncronize Signal Composite

0 0 - 0.5V

1 +3V - +5V

(3) Screen Image Size

Image can be shrunk both horizontally and vertically by 10%. Adjust monitor to widen the screen image.

MAIN WIRING HARNESS PCB TERMINATIONS

1) Terminal Numbering CR7E-44DA-3.96E(HIROSE) 3.96mm Pitch

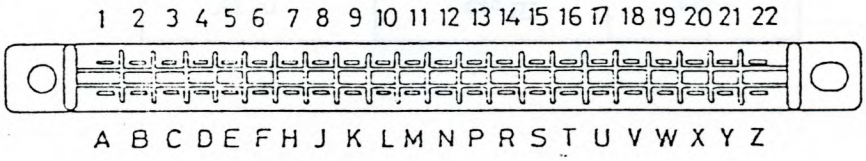

2) Signals to Terminal

Connector CN3 CR7E-44DA-3.96E

Pin No.	Signal	Pin No.	Signal
1	RIGHT DOWN	A	
2	RIGHT UP	B	
3	RIGHT LEFT	C	
4	RIGHT RIGHT	D	
5	LEFT DOWN	E	
6	LEFT UP	F	
7	LEFT LEFT	H	
8	LEFT RIGHT	J	
9		K	
10		L	
11	1P SELECT	M	2P SELECT
12	COIN 1	N	COIN 2
13	COIN COUNTER 1	P	COIN COUNTER 2
14	TV. B	R	TV. G
15	SYNC	S	TV. R
16		T	
17	SOUND +	U	SOUND —
18	+12V	V	—5V
19	+5V	W	+5V
20	+5V	X	+5V
21	GND	Y	GND
22	GND	Z	GND

MONITOR DRIVE CIRCUITRY

PCB - DFV-1

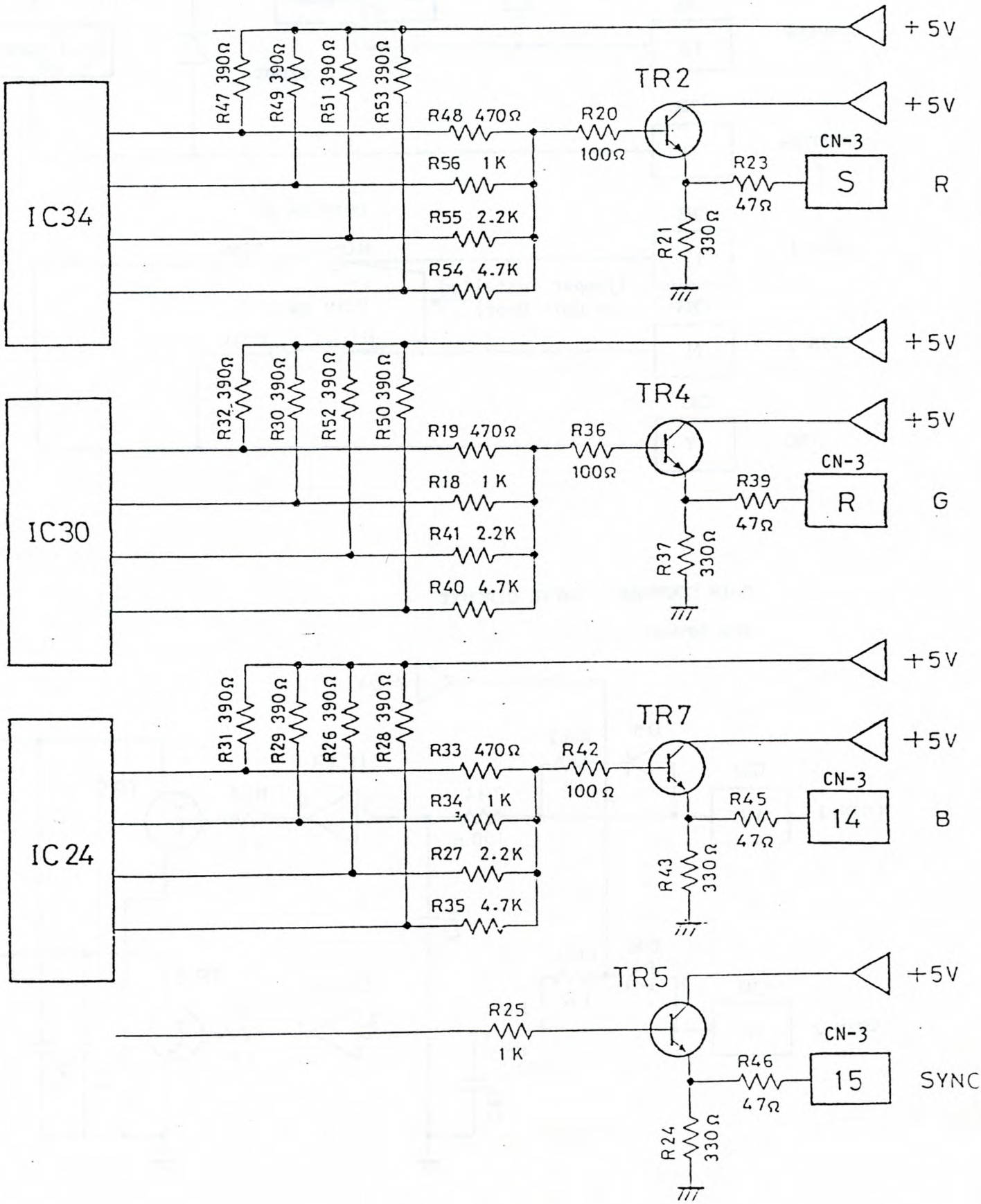

COIN COUNTER CIRCUIT

PCB DFV-01

NOTE: Only Coin Counter #2 is installed at factory.

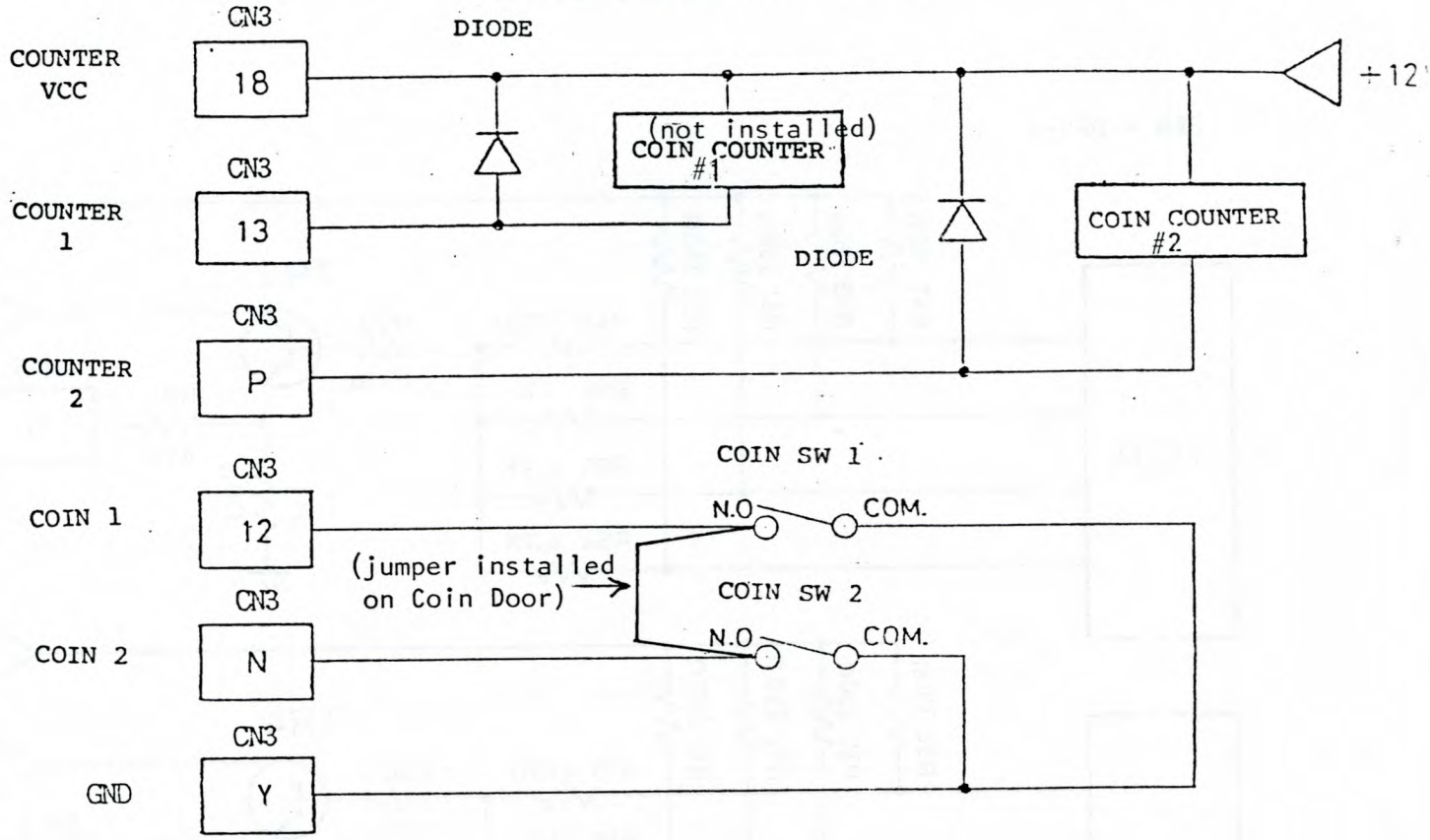

COIN COUNTER - DRIVE CIRCUIT

PCB DFV-01

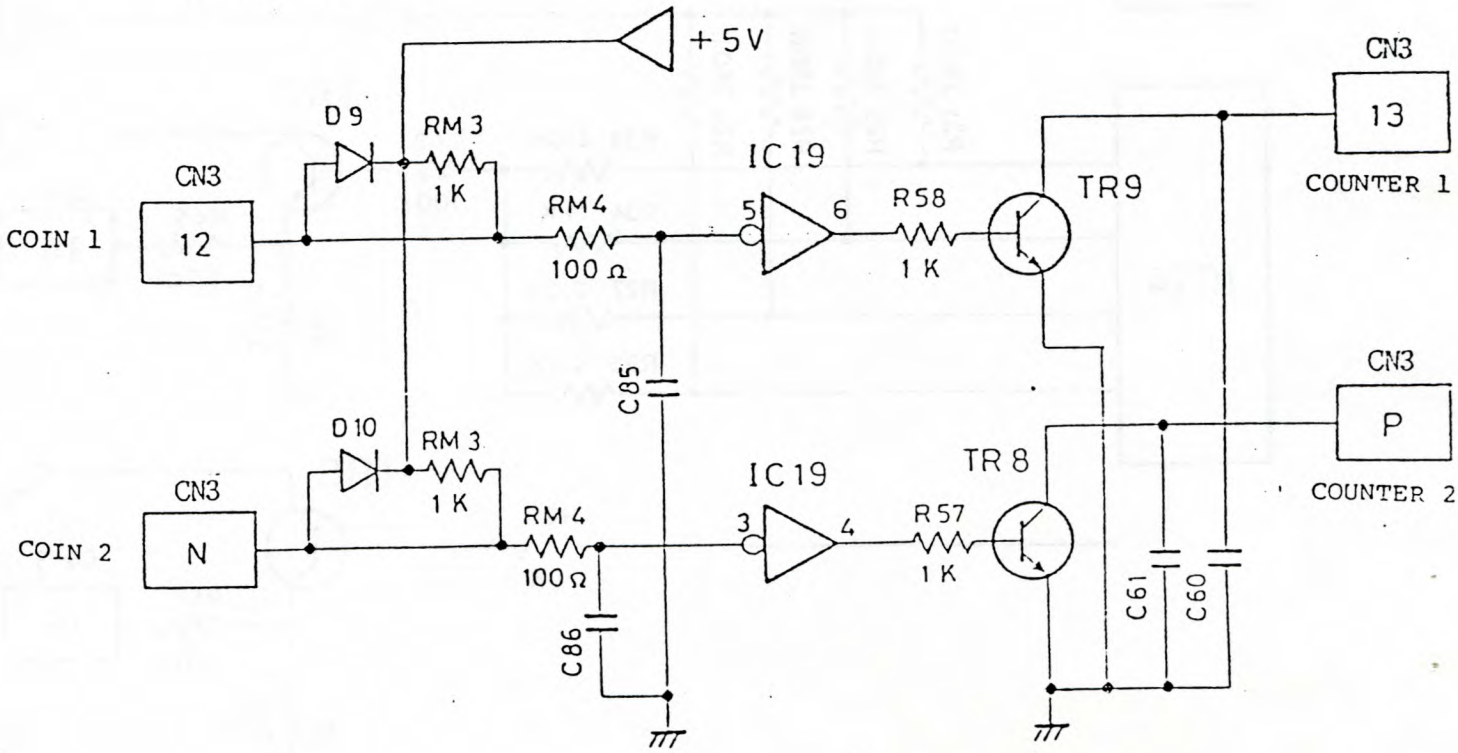

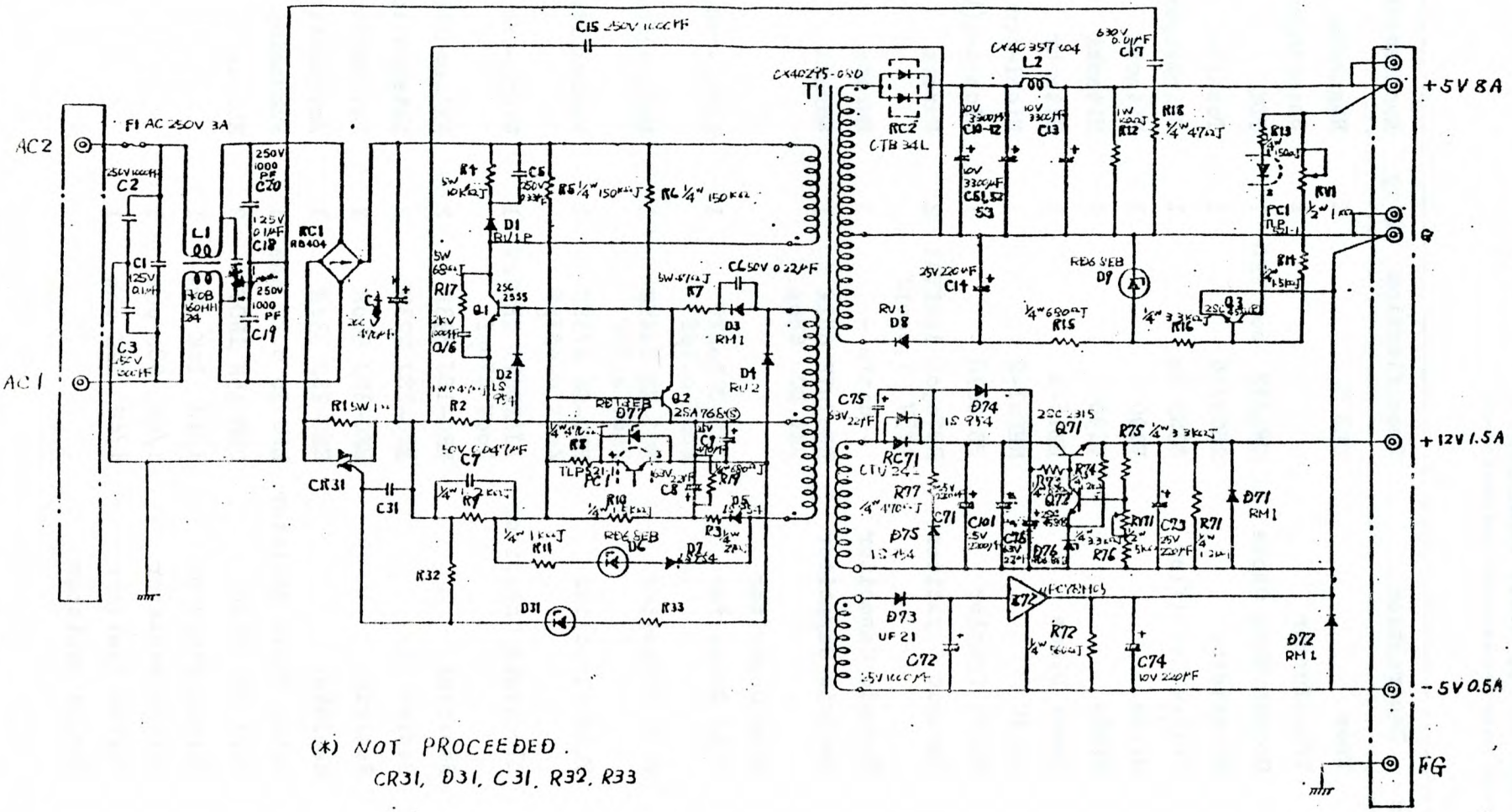

(*) NOT PROCEEDED.
CR31, D31, C31, R32, R33

材質		処理		公差	名称 SANKEN SWS-60B SWITCHING REGULATOR
承認	検図	検図	担当	単位 mm	図面 K-10505 1/1
				R度 /	

第3角法 テクニスト株式会社

POWER SUPPLY Model KGD23SMK-II

Item	Parts Nos	Description	Specification	Q'ty	Manufacturer
1.	F4o	Fuse	GHS 5	1	Nagasawa
2.	T4o	Transformer		1	Shindengen
3.	L42	Commom Mode Choke	UF327S 6o2YIRO	1	TDK
4.	Q4o	Transistor	2SC33o6	1	Toshiba
5.	RF4o	Bridge Rectifier	S3WB 4o	1	Shindengen
6.	D4o	Diode	V19C	1	Hitachi
7.	D46	Diode	V19G	1	Hitachi
8.	DZ4o	Zener Diode	HZ16-1	1	Hitachi
9.	ICo1	HB IC	RHDo1-2	1	Nichi-con
1o.	PCo1	Photo Coupler	PS 2o18	1	Nichiden(NEC)
11.	C4o, 41	Seramic Capacitor	DE7o9oB 1o2KVA1 125V 1,ooopf	2	Murata
12.	C47	Seramic Capacitor	- ditto -	1	Murata
13.	C8o	Seramic Capacitor	DEo7o7B 681K 2KV DC 68op	1	Murata
14.	C42	Film Capacitor			
15	C43	Film Capacitor	QXM2G 1o4KT 4ooV o.1µf	1	Nichi-con
16.	C46	Film Capacitor	ECQ-E2 1o4KS 2ooV o.1µf	1	Matsushita
17.	C48	Film Capacitor	ECQ-E6 473KZ 4ooV o.o47µf	1	Matsushita
18.	C5o	Electrode Capacitor	LJA2D471 THSCBV 2ooV 47oµf	1	Nichi-con
19.	R37, 4o	Resistor	ERG-1SJ 393H	2	Matsushita
2o.	R47, 46	Resistor	ERG-2SJ 223H	2	Matsushita
21.	R48, 49	Resistor	ERG-3SJ 56oH	2	Matsushita
22.	R8o	Resistor	ERG-2SJ 33oH	1	Matsushita
23.	R42	Metal Plate Resistor	MPC 7o o.22 ohm	1	Fukushima Futaba
24.	R53, 54	Coil Resistor	MNS o5N 1ROJ	2	Micron
25.	R41	Carbon Resistor	1/4W 1oK ohm	1	
26.	R5o	Carbon Resistor	1/4W 68o ohm	1	
27.	R51	Carbon Resistor	1/4W 12K ohm	1	
28.	R52	Carbon Resistor			

Item	Parts Nos	Description	Specification	Q'ty	Manufacturer
29.	Lo1	Choke	RD1113A 3J 3uH 1oA	1	Hokkoh
3o.	Lo3	Choke	RD81oA 3F 3uH 5A	1	Hokkoh
31.	Qo2	Transistor	2SD1o22 or 2SD13o8	1	Shindengen
32.	Do1	Diode	ESAC 83-oo4	1	Fuji Denki
33.	Do2	Diode	5CH2M or ESAC25-o2o	1	Fuji Denki or NEC
34.	Do3	Diode	- ditto -	1	Fuji Denki
35.	DZo2	Zener Diode	HZ 6B-2	1	Hitachi
36.	DZo3	Zener Diode	HZ 12B-1L	1	Hitachi
37	THYo1	Thyristor	5PIM or SF5B41	1	NEC or Toshiba
38.	ICo2	I.C.	TL431 CLP	1	T.I.
39.	Co1, o2	Capacitor	SXA 16VB 22oo	2	Nichi-Chemi
4o.	Co3, o5	Capacitor	CEUSM 1V 47o 35V 47oμf	2	Nichi-con
41	Co4	Capacitor	CEUSM 1E 331 25V 33oμf	1	Nichi-con
42.	Co7, o6	Capacitor	CEUSM 1E 331 25V 33oμf	2	Nichi-con
43.	Co8	Capacitor	CEUSM 1H 1o1o	1	Nichi-con 5oV 1μf
44.	Co9	Capacitor	CEUSM 1V 4R7 35V 4.7μf	1	Nichi-con
45.	C11	Film Capacitor	TDY1H/2A 1o4K 5oV o.1μf	1	Nichi-con
46.	Ro1, 13	Resistor	ERG 3SJ 68oH	2	Matsushita 3W 68Ω
47.	Ro8	Resistor	ERG3SJ 271H	1	Matsushita 3W 27oΩ
48.	Ro9	Resistor	ERG 2SJ R68 2W o.68 ohm	1	Matsushita
49.	R1o	Resistor	ERG 1SJ 271 1W 27o ohm	1	Matsushita
5o.	RVo1	Volume	EVM38GA ooB52 5oo ohm	1	Matsushita
51.	Ro3	Carbon Resistor	1/4W 68 ohm	1	
52.	Ro4, 11	Carbon Resistor	1/4W 56o ohm	2	
53.	Ro5	Carbon Resistor	1/4W 39o ohm	1	
54.	Ro6	Carbon Resistor	1/4W 15 ohm	1	
55.	Ro2				
56.		P.C. Board		1	
57.	TB1	Terminal Strip		1	
58.		Terminals	Faston	7	

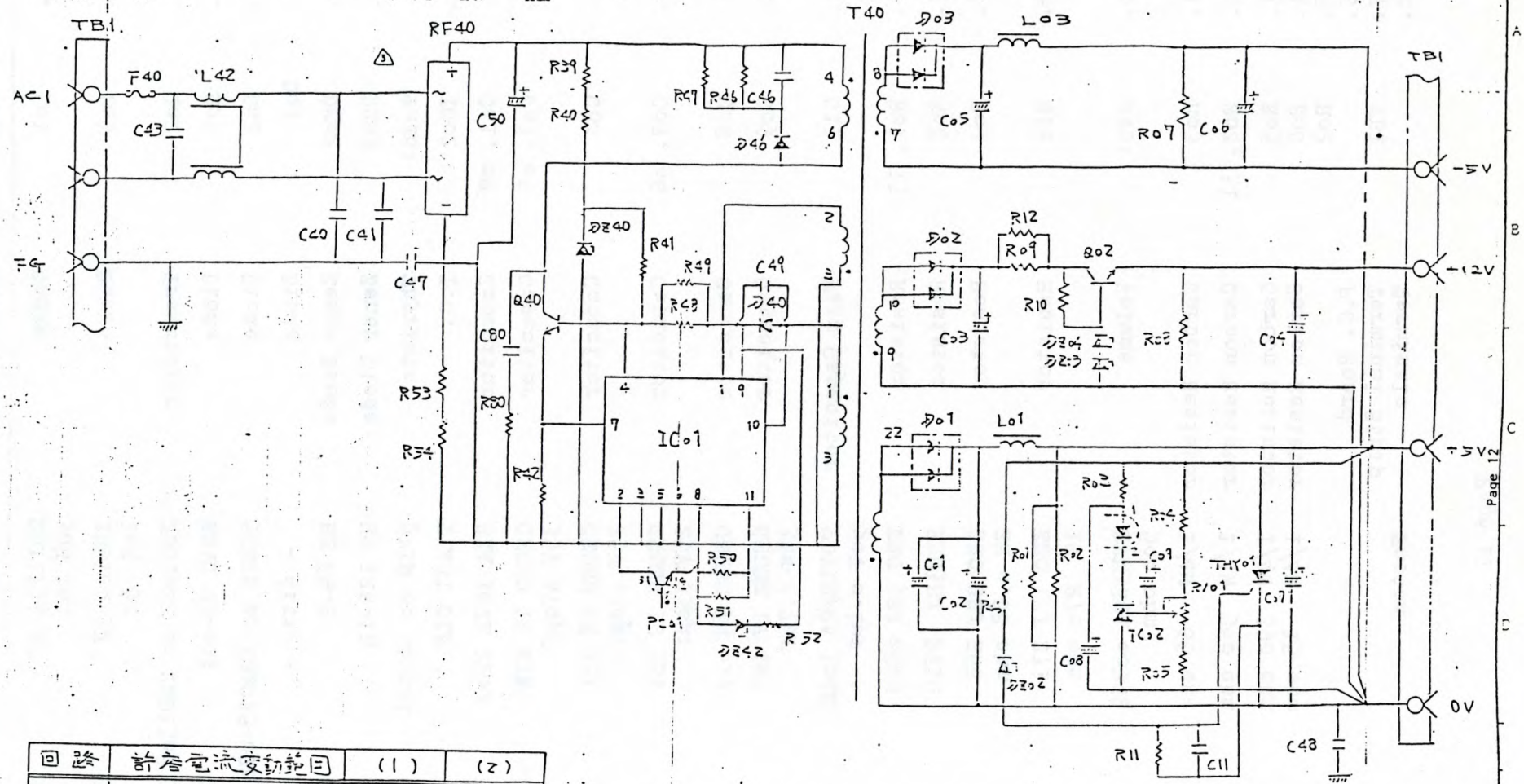

回路	許容電流変動範囲	(1)	(2)
+5V	1A ～ 7A	7A	6A
+12V	0.2A ～ 1.5A	1.0A	1.5A
−5V	0.2A ～ 0.5A	0.5A	0.5A

但し出力容量はTatalで50W

C49は実装されません。

MATL. 材質

TRMT

: 内電 SW. REGULATOR KAGA

EDIT. 変更	DATE 年月日	DECD. 設計	DISCRIPTION 内容
3	58.11	[illegible]	C42 [illegible]
2	[illegible]	[illegible]	[illegible]

DATE 年月日 | DRAWING PROJ. 図面番号 | SCALE 尺度 / | UNIT 単位 mm

APPD. 承認 | CHKD. 検図 | DECD. 設計

TITLE 名称 KGD23S MKII-3ch 回路図

SHINDENGEN ELECTRIC MFG.CO.,LTD. (株)新電元工業株式会社 JAPAN

DWG.NO. 図番 MM-330066

SHEET 1 OF 1 ページ

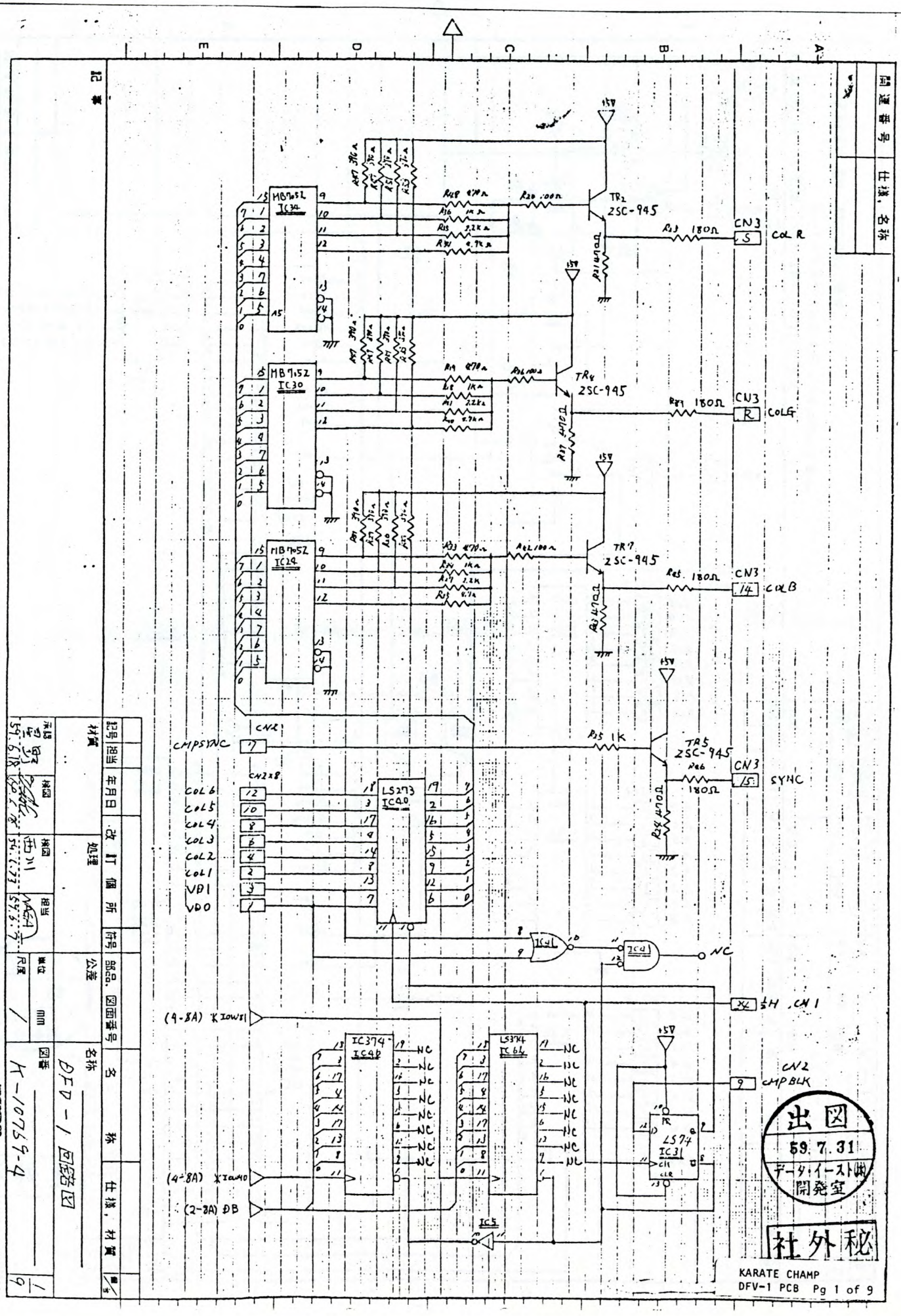
MB7052
IC34
MB7052
IC30
MB7052
IC29
TR2
2SC-945
TR4
2SC-945
TR7
2SC-945
TR5
2SC-945
CN3
COL R
COLG
COLB
SYNC
CMPSYNC
CN2
CN2x8
COL6
COL5
COL4
COL3
COL2
COL1
VD1
VD0
LS273
IC40
IC41
NC
½H, CN1
(9-8A) XIOWR
IC374
IC49
IC374
IC64
(4-8A) XIOAD
(2-8A) DB
IC5
CN2
CMPBLK
LS74
IC31
出図
59.7.31
データイースト㈱
開発室
社外秘
KARATE CHAMP
DFV-1 PCB Pg 1 of 9
DFV-1 回路図
K-10759-4

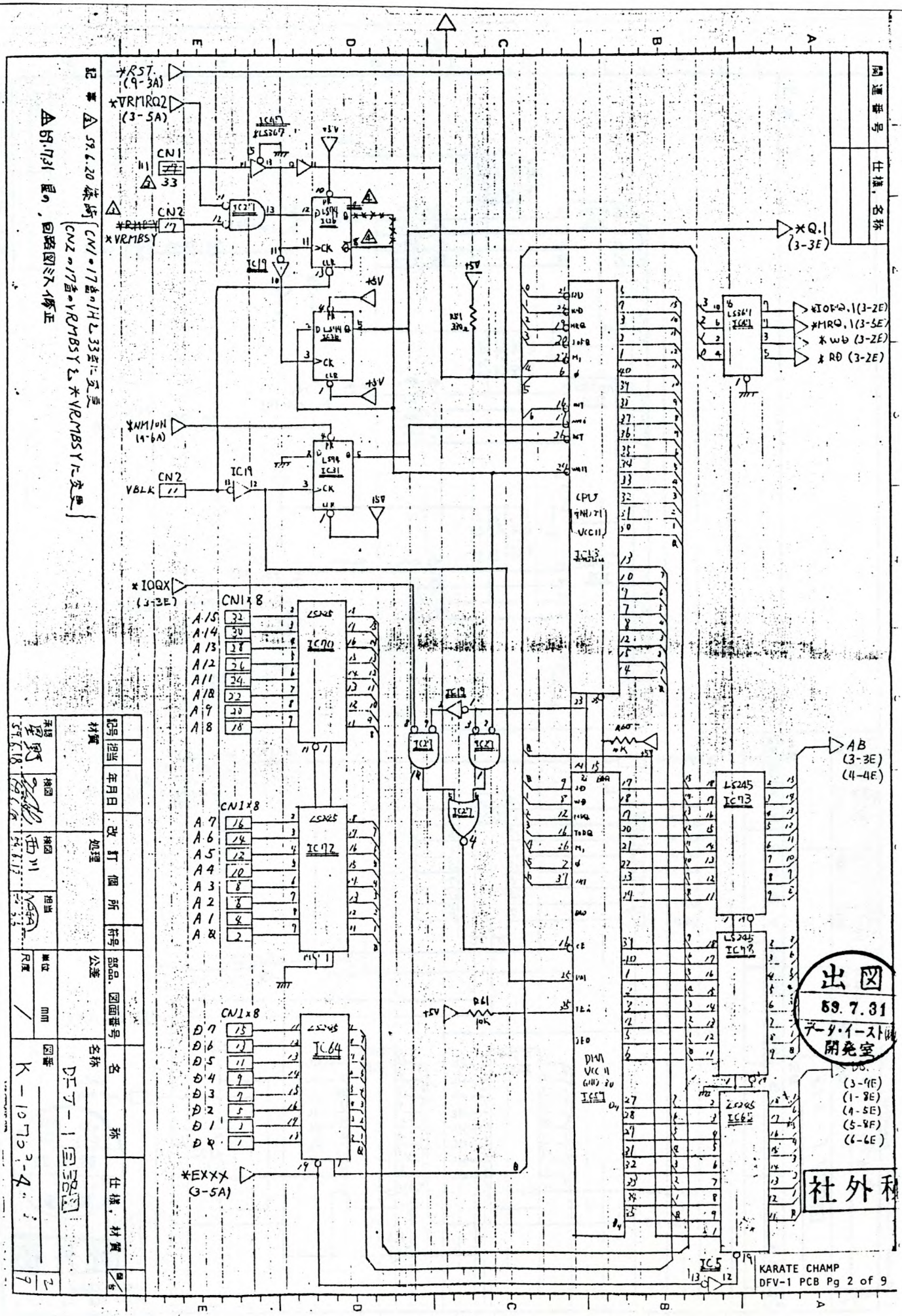

記事 △1 59.6.20 修正 (CN1の17番のPINと33番に変更 CN2の17番のVRMBSYを*VRMBSYに変更)

△2 59.7.31 配線，回路図ミス修正

材質	記号	担当	年月日	改訂個所	処理
検図	品名	図面番号	名称	仕様，材質	図番
検図	単位	尺度	公差		
担当					

名称 データ・イースト

図番 K-10703-4

2/7

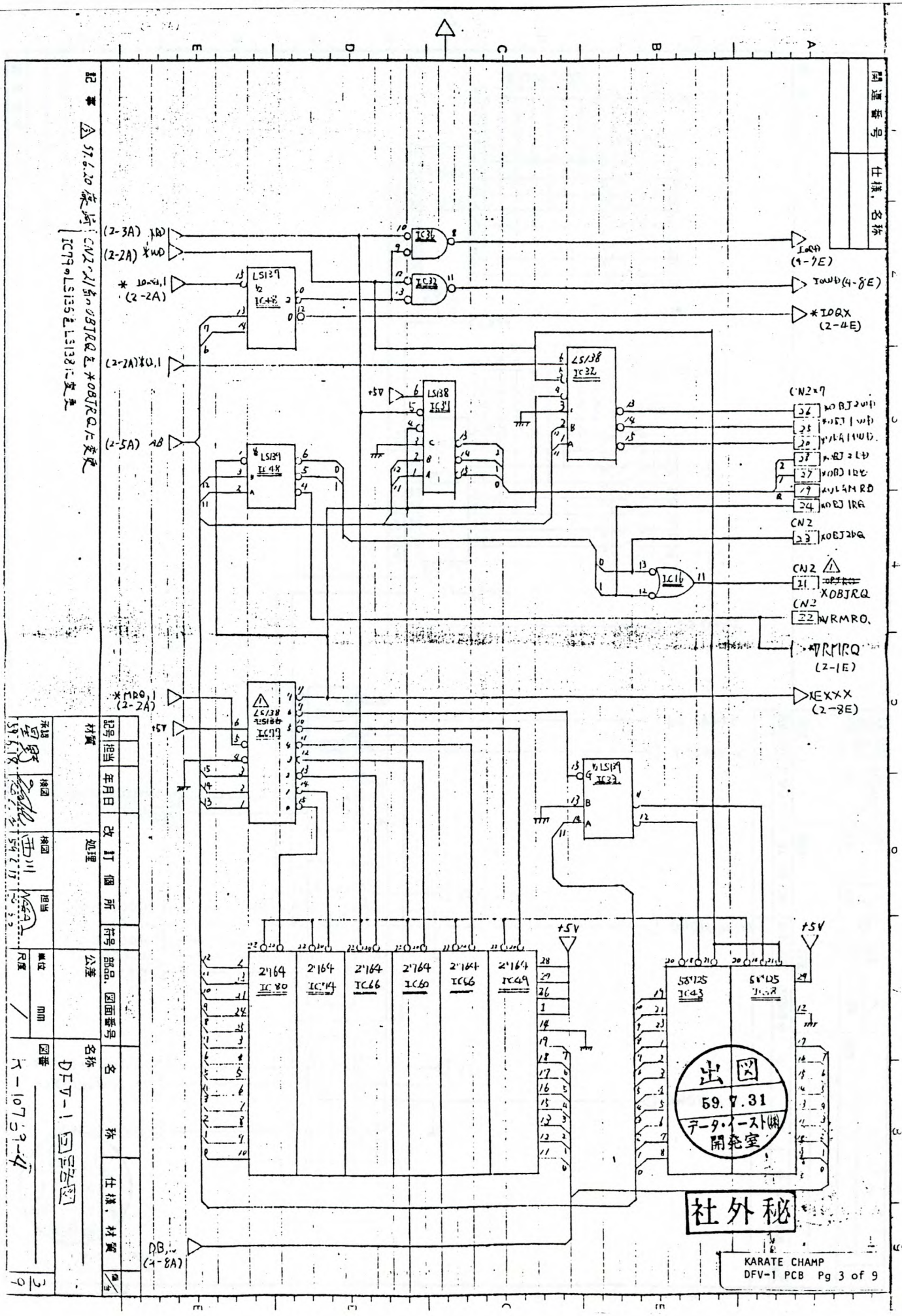
(2-3A) IRQ
(2-2A) *IWD
* IORQ,1 (2-2A)
(2-2A) *IO,1
(2-5A) AB
*MRQ,1 (2-2A)
DB,.. (1-8A)
IORQ (4-7E)
IOWD (4-8E)
*IOQX (2-4E)
CN2×7
XOBJ2WD
XOBJ1WD
XVLSAMWD
XOBJ2RD
XOBJ1RD
XVLSAMRD
XOBJIRQ
CN2
XOBJ2RQ
CN2
XOBJIRQ
CN2
XVRMRQ
*VRMIRQ (2-1E)
XEXXX (2-8E)
LS139 IC48
LS138 IC31
LS138 IC32
LS139 IC48
IC16
LS138 IC37
LS139 IC33
2'164 IC80
2'164 IC74
2'164 IC66
2'164 IC60
2'164 IC66
2'164 IC49
58'125 IC43
58'125 IC58
+5V
出図
59.7.31
データ・イースト㈱
開発室
社外秘
KARATE CHAMP
DFV-1 PCB Pg 3 of 9

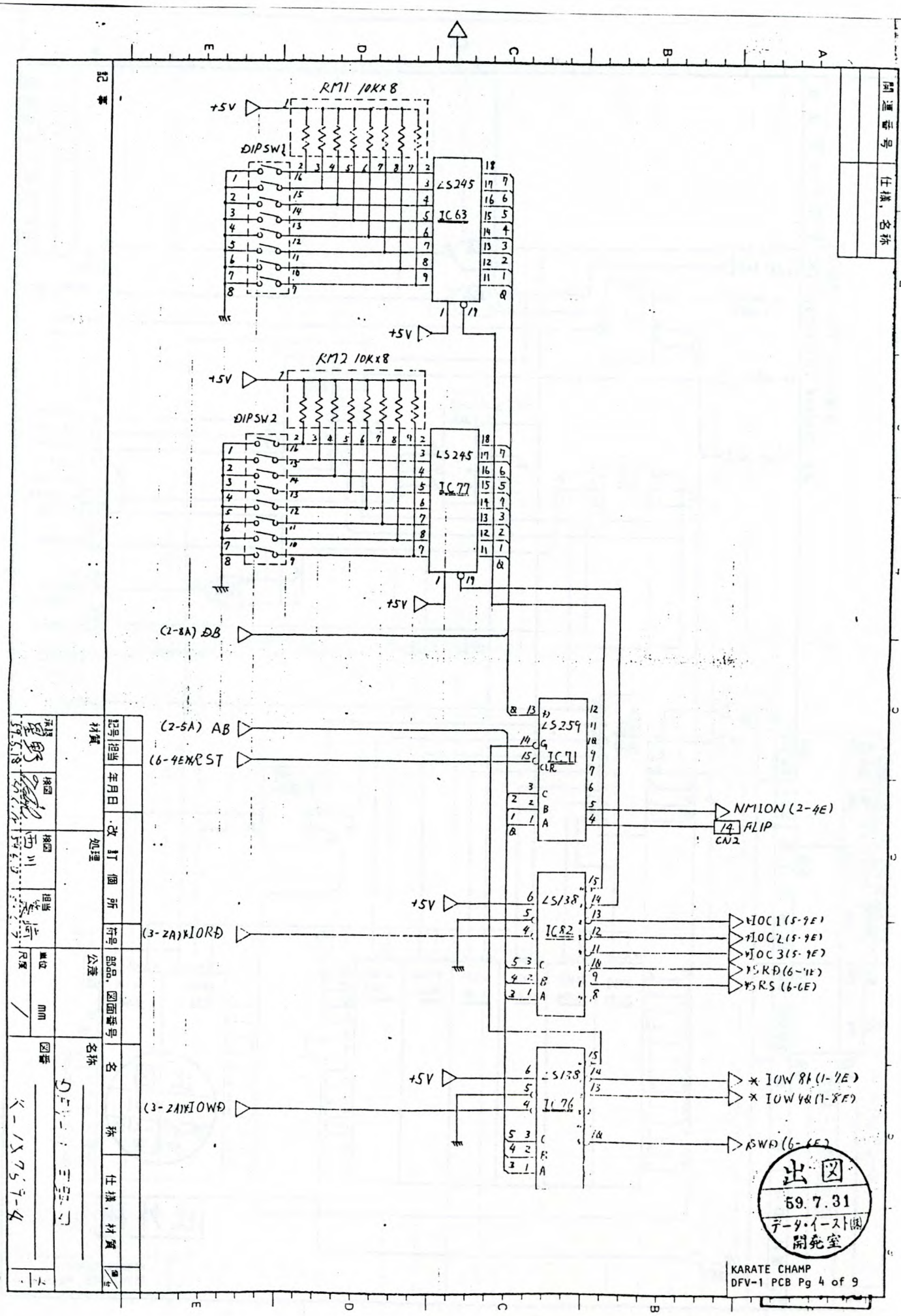
RM1 10Kx8
DIPSW1
LS245
IC63
RM2 10Kx8
DIPSW2
LS245
IC77
+5V
(2-8A) DB
(2-5A) AB
(6-4E)*RST
LS259
IC71
NMION (2-4E)
FLIP
CN2
(3-2A)*IORD
LS138
IC82
*IOC1 (5-9E)
*IOC2 (5-9E)
*IOC3 (5-9E)
*SRD (6-1E)
*SRS (6-6E)
(3-2A)*IOWD
LS138
IC76
* IOW8A (1-7E)
* IOW4A (1-8E)
SWD (6-6E)
出図
59.7.31
データ・イースト開発室
KARATE CHAMP
DFV-1 PCB Pg 4 of 9

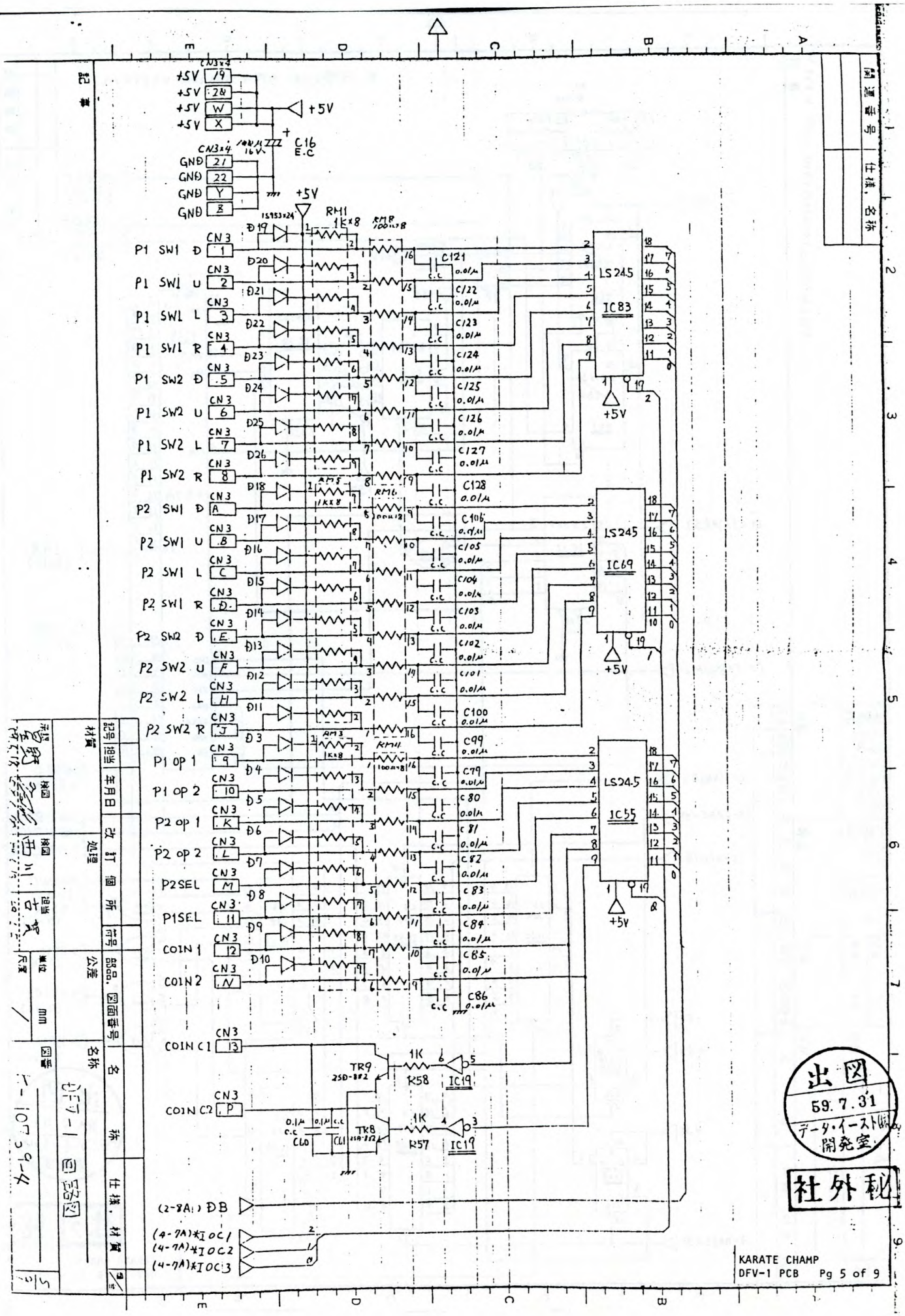

出図
59.7.31
データ・イースト㈱
開発室

社外秘

KARATE CHAMP
DFV-1 PCB Pg 5 of 9

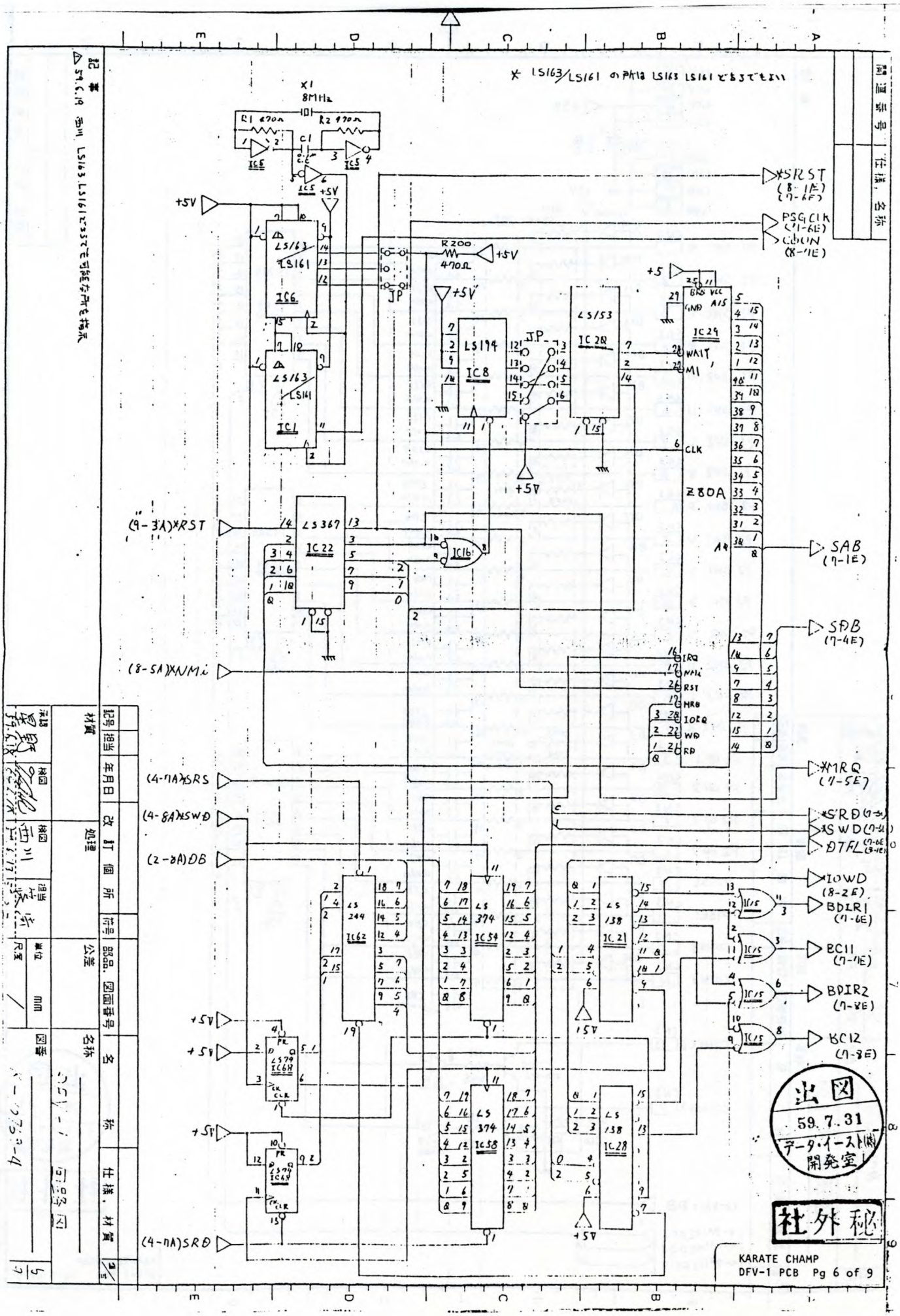
X1
8MHz
R1 470Ω
R2 470Ω
C1
IC6
IC5
+5V
LS163
LS161
IC6
LS163
LS161
IC1
R200
470Ω
JP
LS194
IC8
LS153
IC28
IC29
Z80A
WAIT
M1
CLK
LS367
IC22
IC16
*SRST
PSG CLK
CBON
SAB
SDB
IRQ
NMI
RST
MRQ
IORQ
WR
RD
*MRQ
*SRD
SWD
DTFL
IOWD
BDIR1
BC11
BDIR2
BC12
(9-3A)*RST
(8-5A)*NMI
(4-7A)*SRS
(4-8A)*SWD
(2-3A)DB
(4-7A)SRD
LS 244
IC62
LS 374
IC54
LS 138
IC21
LS 374
IC58
LS 138
IC28
LS 379
IC64
LS 379
IC69
出図
59.7.31
データ・イースト(株)
開発室
社外秘
KARATE CHAMP
DFV-1 PCB Pg 6 of 9

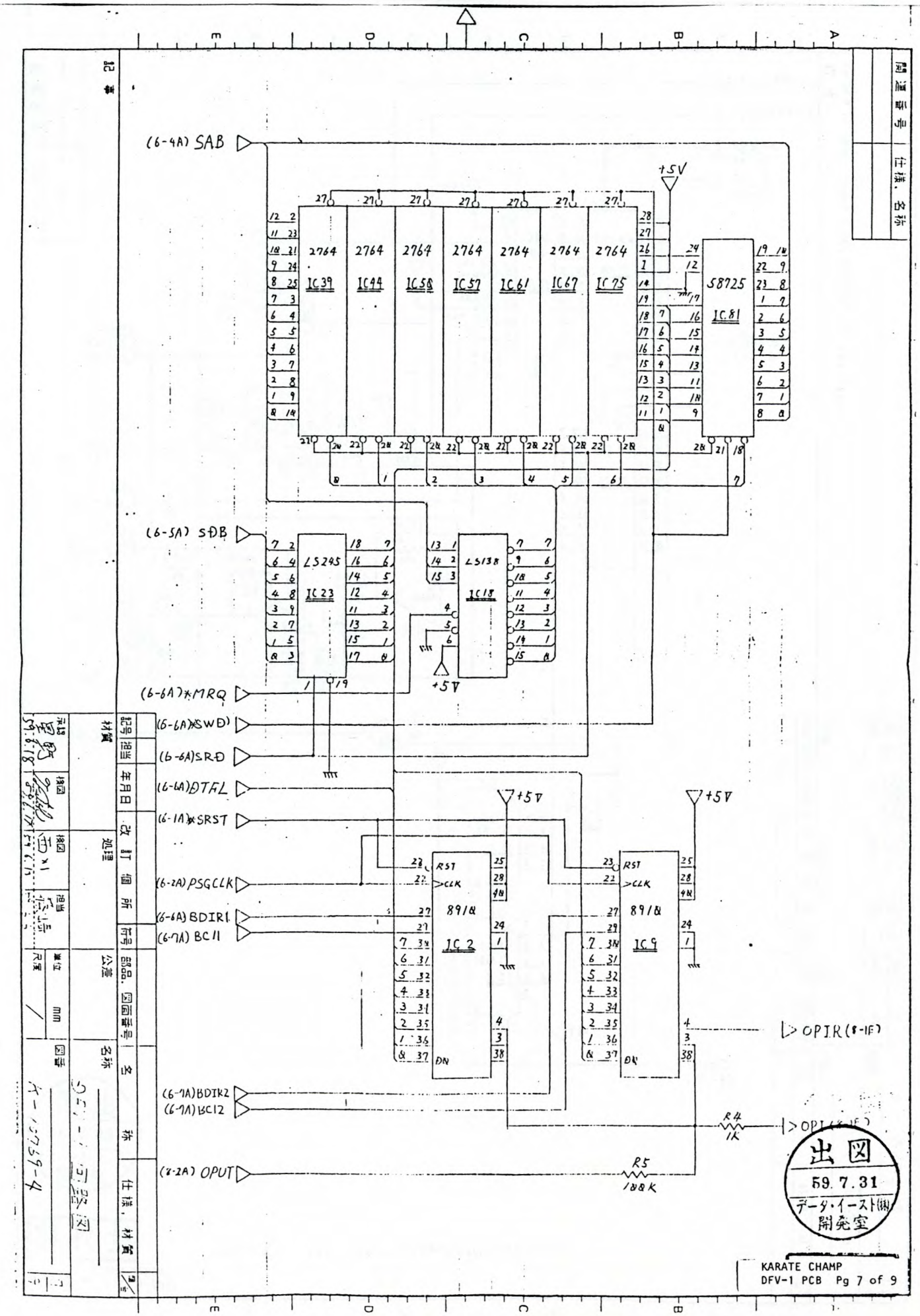
(6-4A) SAB
(6-5A) SDB
(6-6A)*MRQ
(6-6A)*SWD
(6-6A)SRD
(6-6A)DTFL
(6-1A)*SRST
(6-2A)PSGCLK
(6-6A)BDIR1
(6-7A)BC11
(6-7A)BDIR2
(6-7A)BC12
(8-2A) OPUT
OPIR(8-1F)
OPI(8-1F)
+5V
2764
IC39
IC49
IC58
IC57
IC61
IC67
IC75
S8725
IC81
LS245
IC23
LS138
IC18
8918
IC2
IC9
RST
CLK
DN
R4
1K
R5
100K
出図
59.7.31
データ・イースト(株)
開発室
KARATE CHAMP
DFV-1 PCB Pg 7 of 9

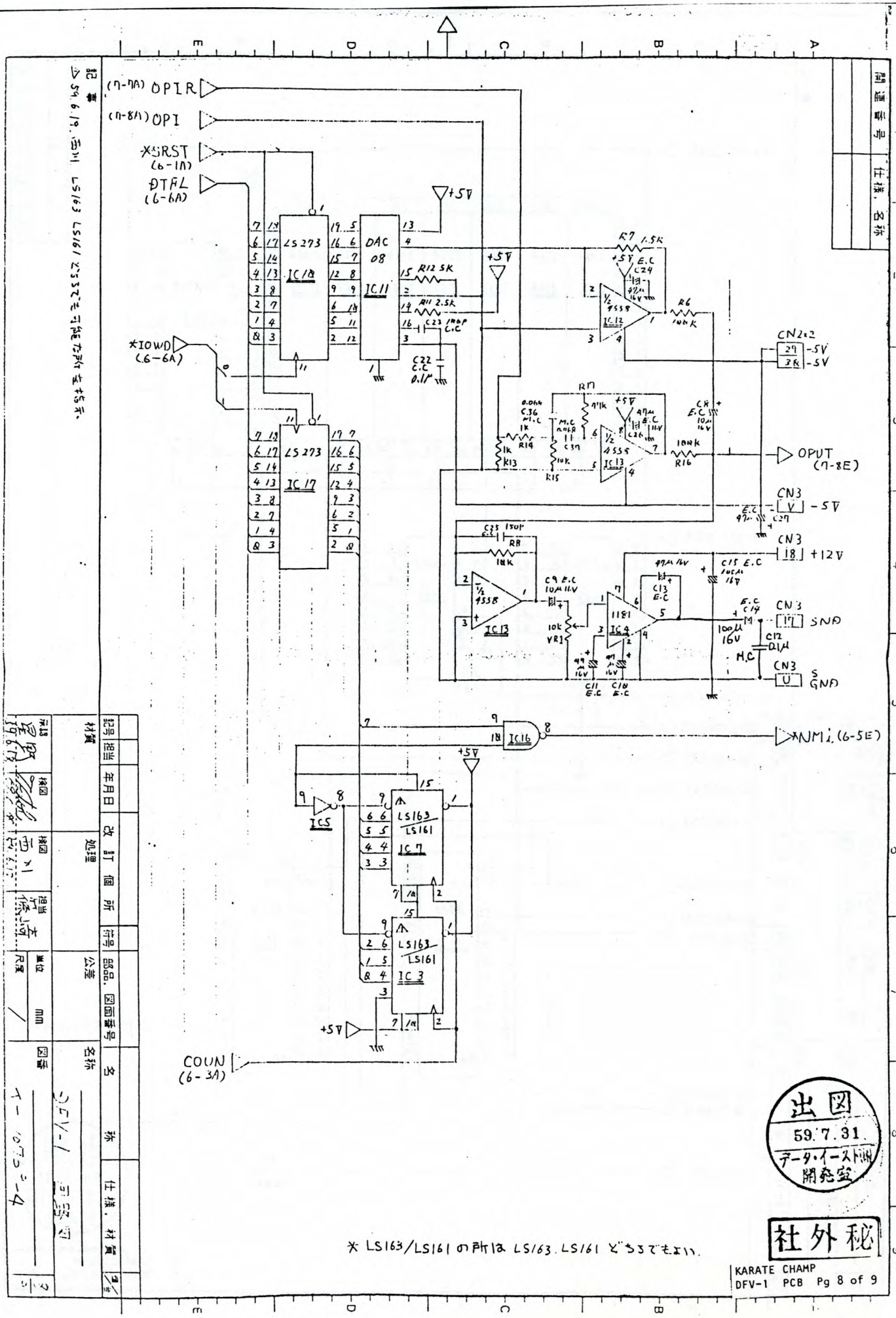

記事 ☆59.6.19. 西川 LS163 LS161 で可能な所を指示.

*LS163/LS161の所はLS163.LS161どちらでもよい.

出図 59.7.31 データ・イースト㈱ 開発室

社外秘

KARATE CHAMP
DFV-1 PCB Pg 8 of 9

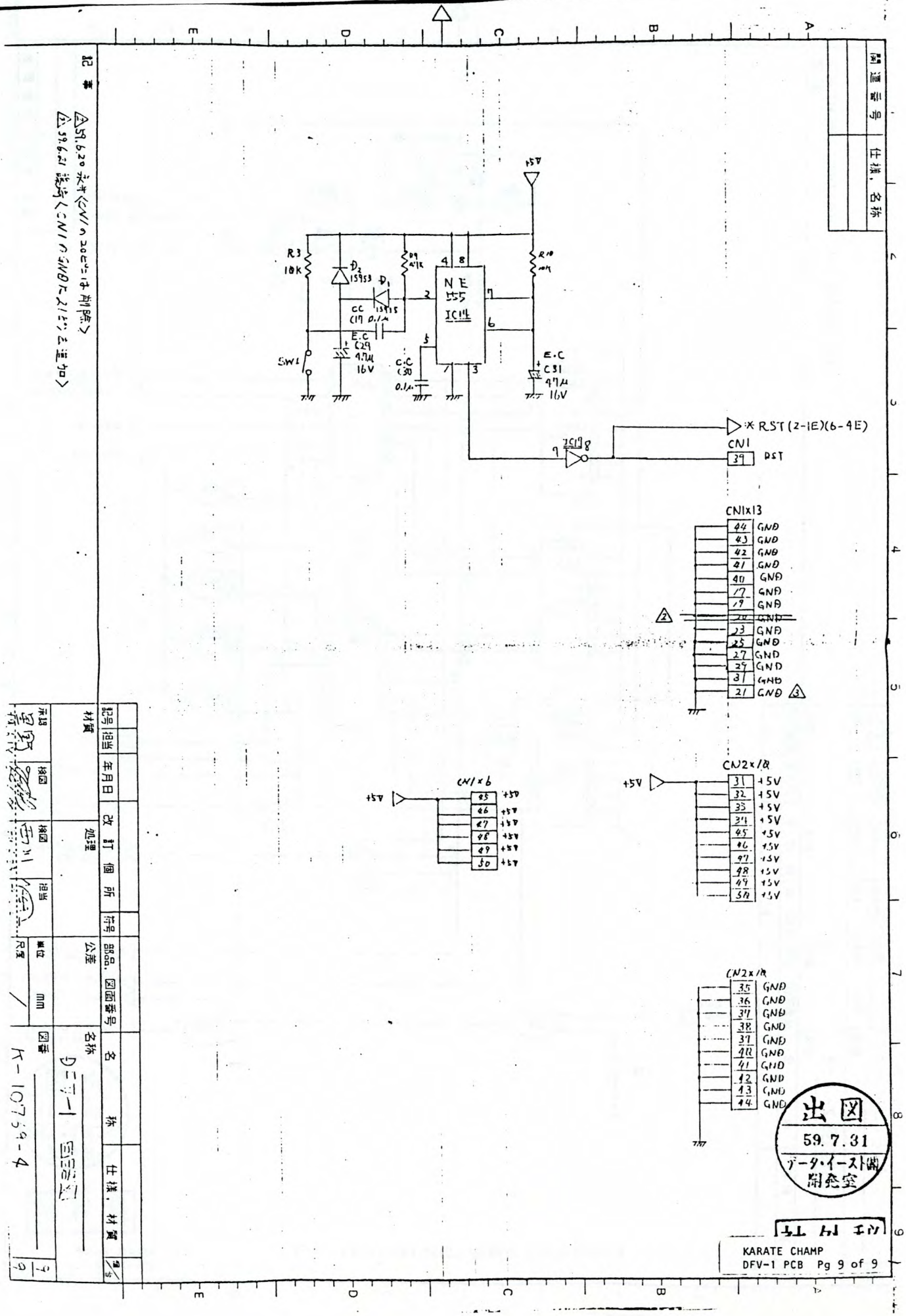
+5V
R3 10K
D2 1S953
D1 1S935
R9 47K
CC C17 0.1μ
E.C C29 47μ 16V
C.C C30 0.1μ
SW1
NE 555 IC14
R10 47
E.C C31 47μ 16V
7407 8
9
※RST (2-1E)(6-4E)
CN1
39 RST
CN1×13
44 GND
43 GND
42 GND
41 GND
40 GND
17 GND
19 GND
23 GND
25 GND
27 GND
29 GND
31 GND
21 GND
CN1×6
45 +5V
46 +5V
47 +5V
48 +5V
49 +5V
50 +5V
CN2×18
31 +5V
32 +5V
33 +5V
34 +5V
45 +5V
46 +5V
47 +5V
48 +5V
49 +5V
50 +5V
CN2×18
35 GND
36 GND
37 GND
38 GND
39 GND
40 GND
41 GND
42 GND
43 GND
44 GND
出図
59.7.31
データ・イースト開発室
KARATE CHAMP
DFV-1 PCB Pg 9 of 9
記事
△59.6.20 未サ<CN1のコネクタは削除>
△59.6.21 後方<CN1のGNDにスルホールを追加>
図番 K-10759-4
7/9

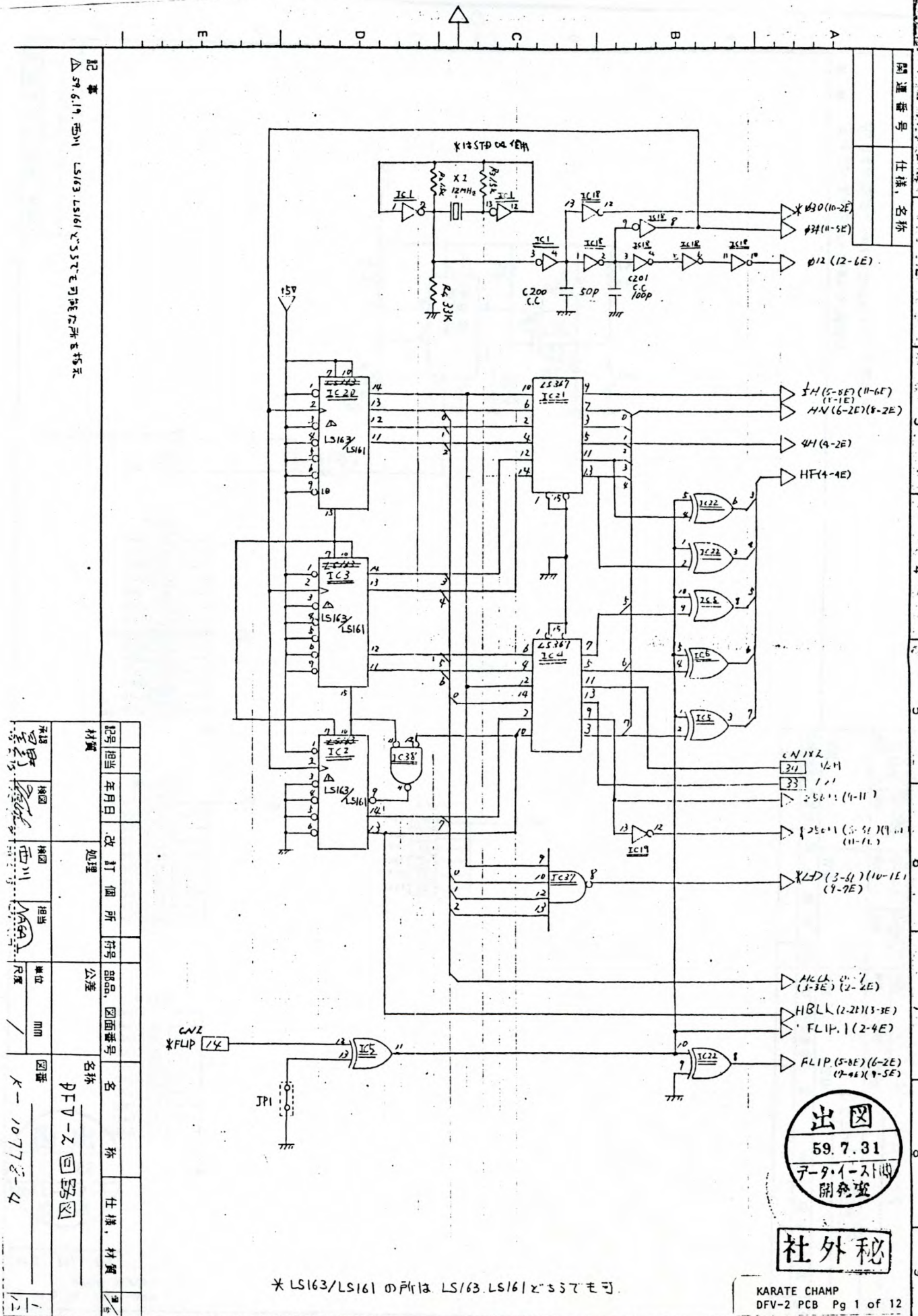

記事

△59.6.19. 西川 LS163.LS161どちらでも可能な所を残す

関連番号																			
仕様，名称																			
記号	担当	年月日	改訂個所	付号	部品，図面番号	名称	仕様，材質	単位											
材質			処理		公差														
承認	検図	検図	担当	単位	mm	名称	DFV-2回路図	図番	K-1077-4	1/12									

出図
59.7.31
データ・イースト㈱
開発室

社外秘

KARATE CHAMP
DFV-2 PCB Pg 1 of 12

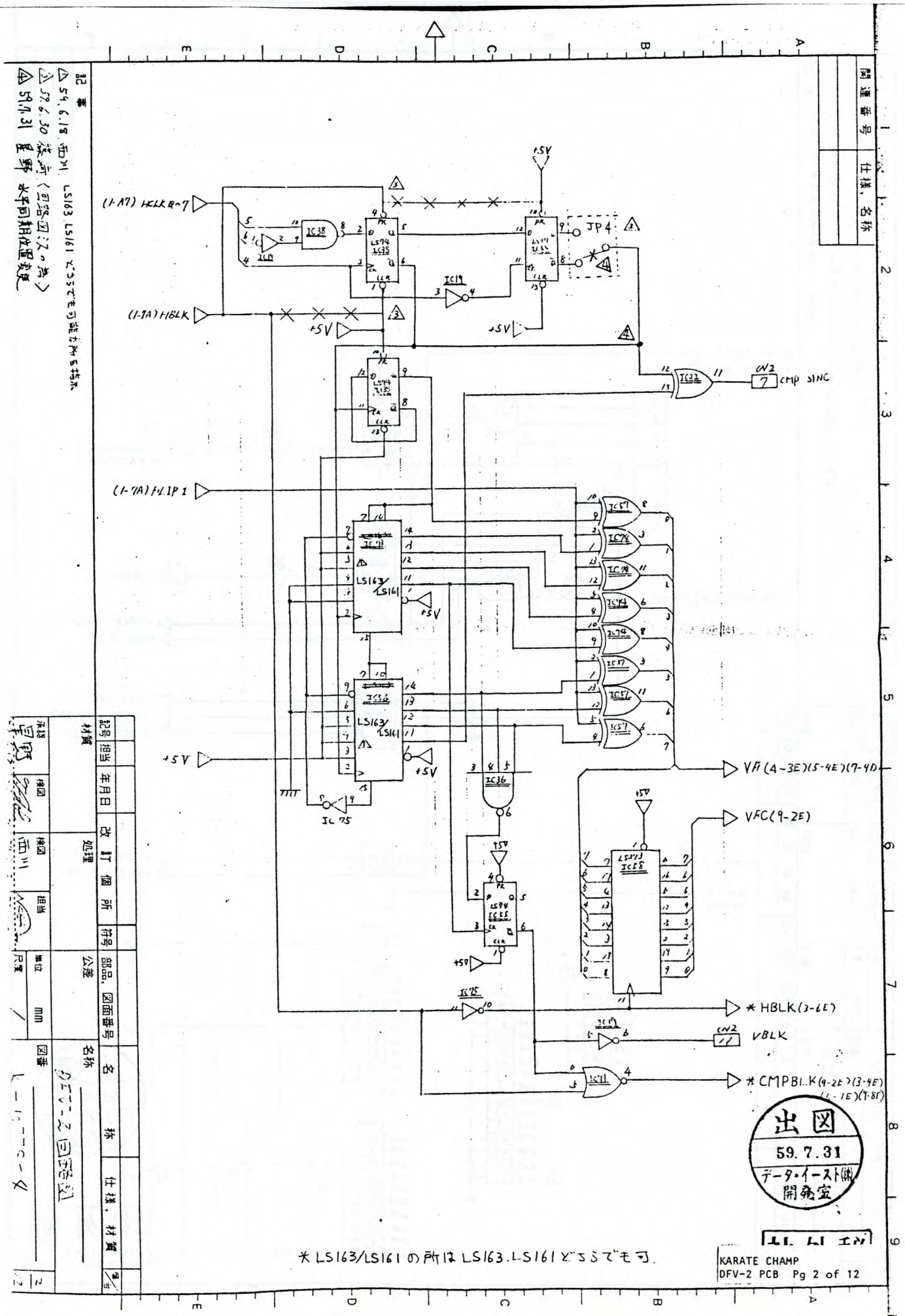
(1-A7) HCLK 8~7
(1-9A) HBLK
(1-7A) HLIP 1
+5V
IC38
IC14
LS74
IC35
IC19
JP4
IC22
CN2
7
CMP SINC
IC48
IC56
LS163
LS161
IC75
IC36
LS273
IC58
VFI (4-3E)(5-4E)(7-4D)
VFC(9-2E)
* HBLK(3-6E)
CN2
11
VBLK
* CMPBLK(9-2E)(3-4E)
(1-1E)(7-8F)
出図
59.7.31
データ・イースト(株)
開発室
* LS163/LS161の所はLS163.LS161どちらでも可.
KARATE CHAMP
DFV-2 PCB Pg 2 of 12
関連番号
仕様，名称
記事
△1 59.6.18 西川 LS163 LS161 どちらでも可能な所を指示
△2 59.6.30 後藤〈回路図ミスの為〉
△4 59.7.31 星野 水平同期位置変更
記号
担当
年月日
改訂個所
符号
部品，図面番号
名称
仕様，材質
材質
処理
公差
検図
担当
単位
mm
名称
図番
データ・イースト 回路図
L-1-1-1-4
2/12

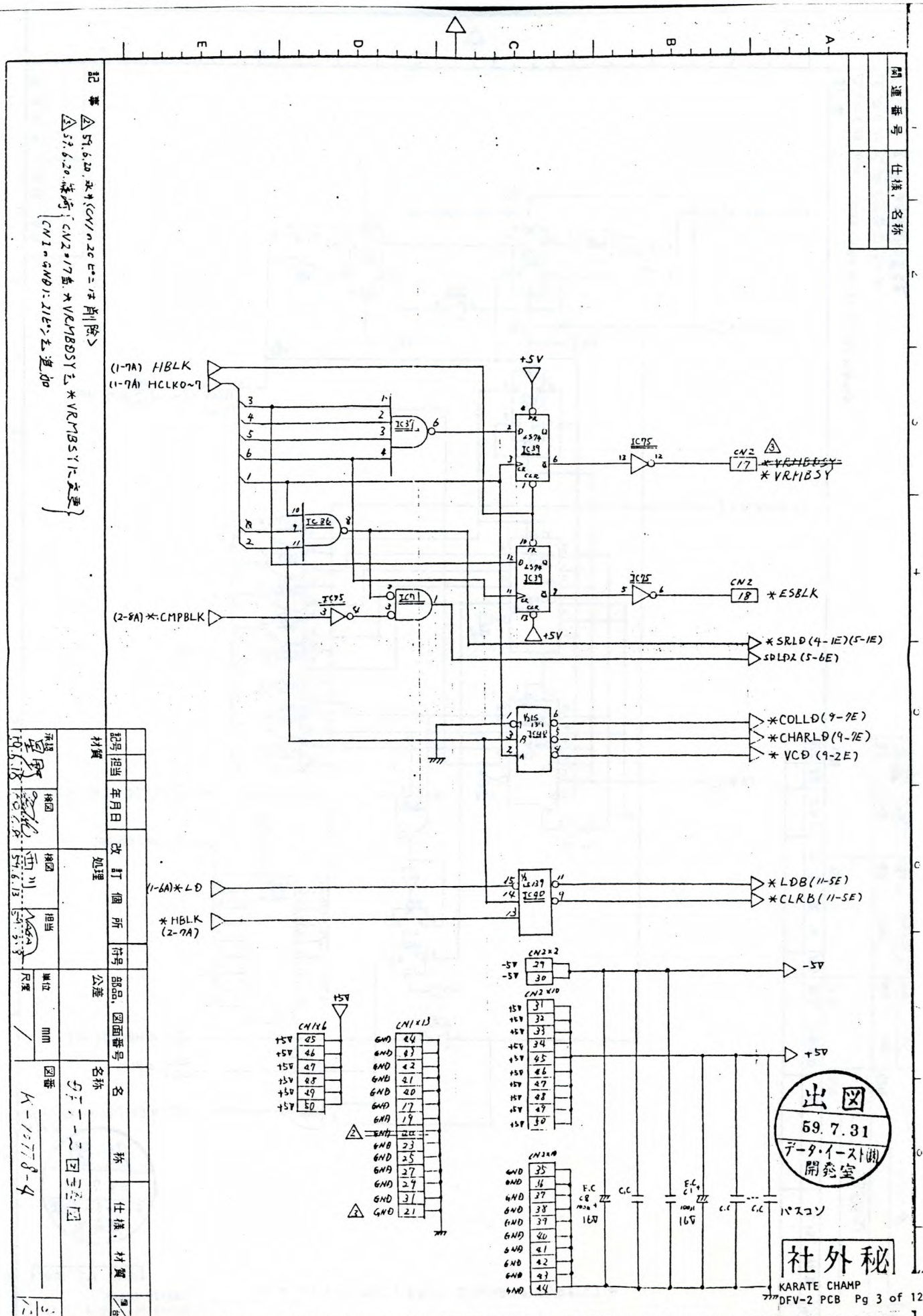
(1-7A) HBLK
(1-7A) HCLK0~7
(2-8A) *CMPBLK
(1-6A) *LD
*HBLK (2-7A)
+5V
IC37
IC36
IC39
IC75
IC71
IC40
CN2 17 *VRMBSY
CN2 18 *ESBLK
*SRLD(4-1E)(5-1E)
SDLD2(5-6E)
*COLLD(9-7E)
*CHARLD(9-7E)
*VCD(9-2E)
*LDB(11-5E)
*CLRB(11-5E)
CN2×2 -5V
CN2×10 +5V
CN1×6
CN1×13
CN2×10
C.C
E.C 100μ 16V
パスコン
出図 59.7.31 データ・イースト開発室
社外秘
KARATE CHAMP
DFV-2 PCB Pg 3 of 12

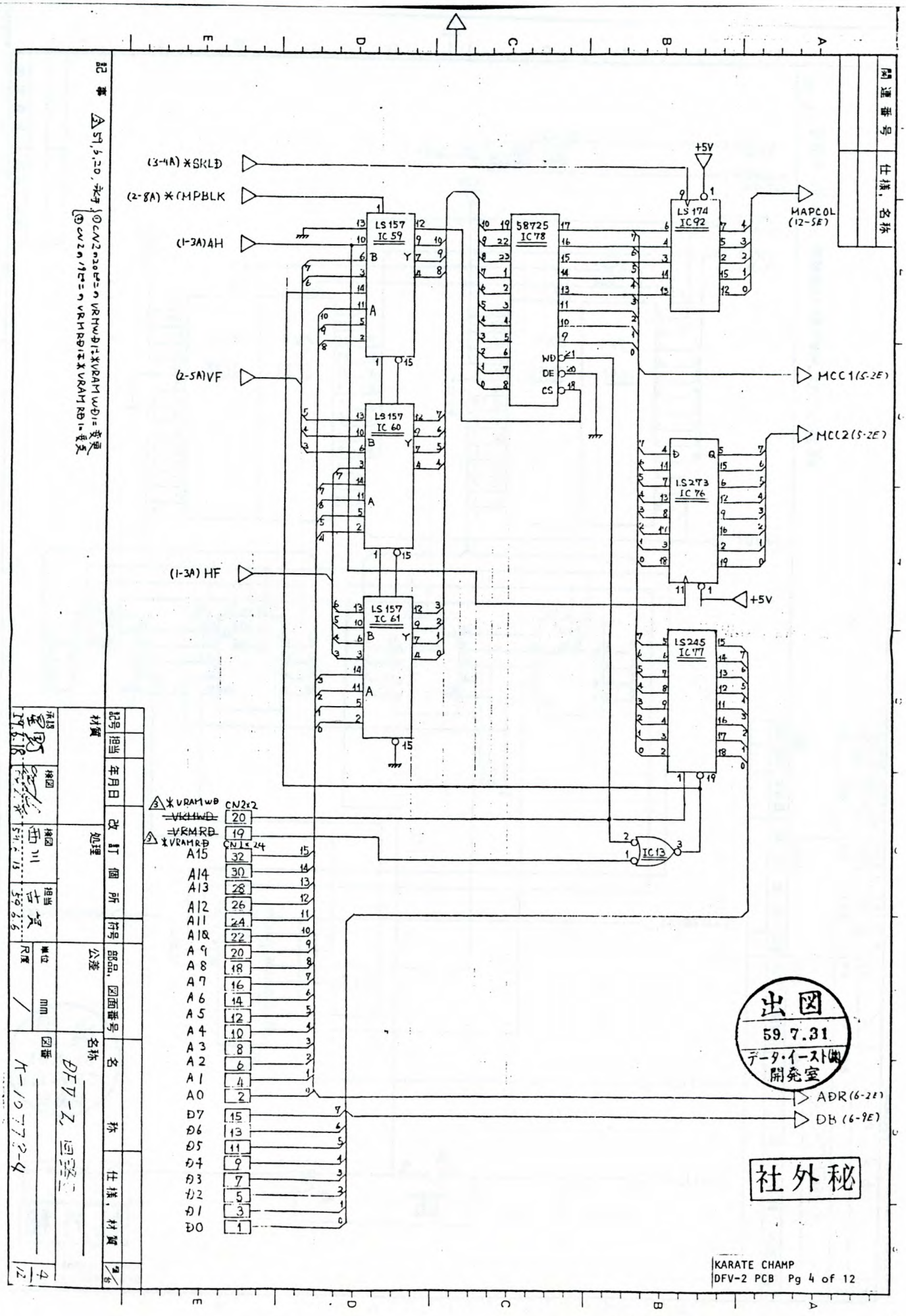
(3-4A) *SKLD
(2-8A) *CMPBLK
(1-3A) 4H
(2-5A) VF
(1-3A) HF
LS157 IC59
LS157 IC60
LS157 IC61
58725 IC78
LS174 IC92
LS273 IC76
LS245 IC77
IC13
+5V
MAPCOL (12-5E)
MCC1 (5-2E)
MCC2 (5-2E)
ADR (6-2E)
DB (6-9E)
CN2x2
CN1x24
A15
A14
A13
A12
A11
A10
A9
A8
A7
A6
A5
A4
A3
A2
A1
A0
D7
D6
D5
D4
D3
D2
D1
D0
出図
59.7.31
データ・イースト(株)
開発室
社外秘
KARATE CHAMP
DFV-2 PCB Pg 4 of 12

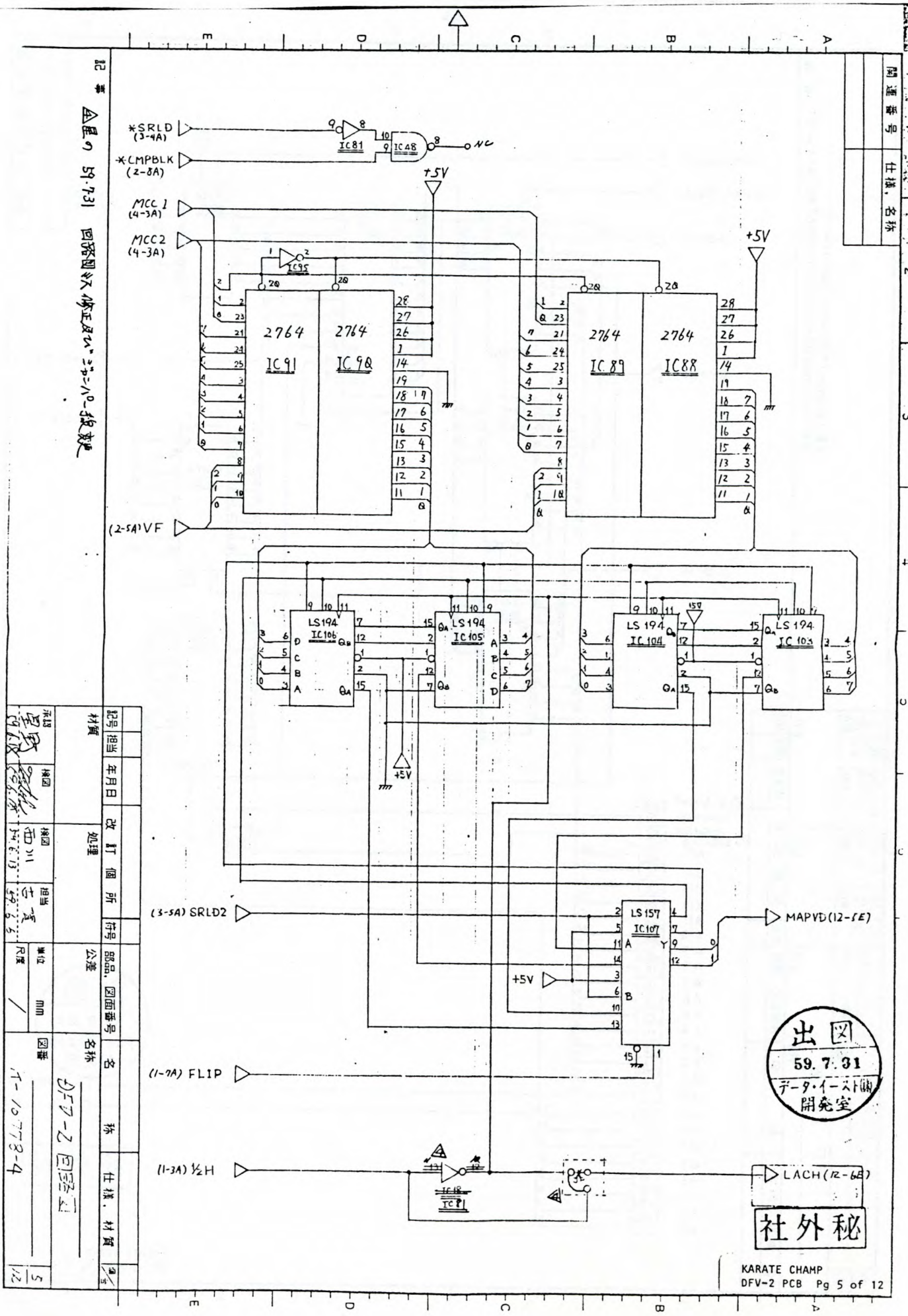
*SRLD (3-4A)
*CMPBLK (2-8A)
IC81
IC48
NC
+5V
MCC1 (4-3A)
MCC2 (4-3A)
IC95
2764 IC91
2764 IC90
2764 IC89
2764 IC88
(2-5A) VF
LS194 IC106
LS194 IC105
LS194 IC104
LS194 IC103
(3-5A) SRLD2
LS157 IC107
MAPVD (12-5E)
(1-7A) FLIP
(1-3A) ½H
IC81
LACH (12-6E)
出図
59.7.31
データ・イースト(株)
開発室
社外秘
KARATE CHAMP
DFV-2 PCB Pg 5 of 12

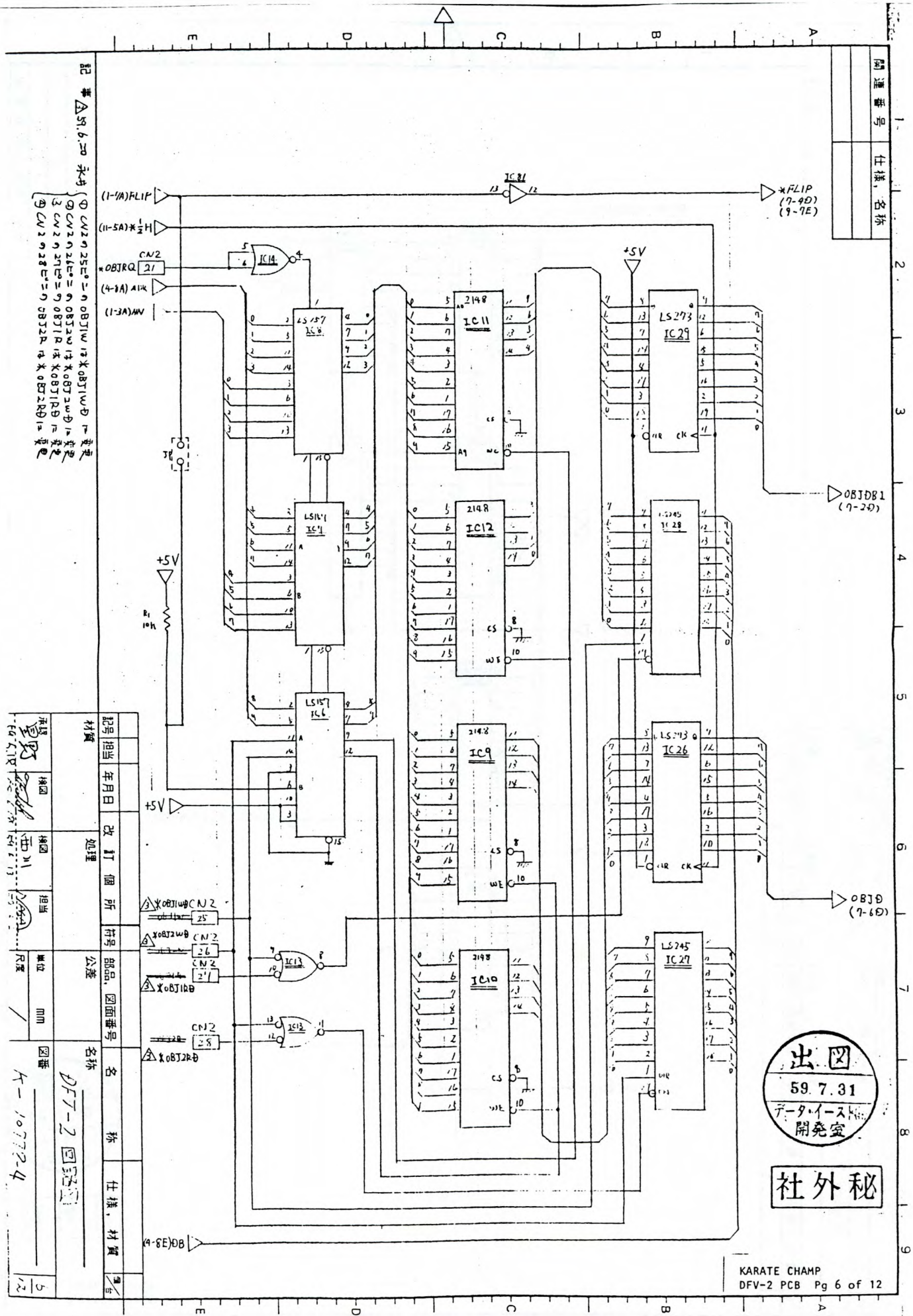
(1-1A)FLIP
(11-5A)*½H
*OBJRQ
CN2
21
(4-8A)
(1-3A)MV
IC14
IC8
IC7
IC6
IC11
IC12
IC9
IC10
IC29
IC28
IC26
IC27
IC13
IC13
+5V
R1
10k
JP
*FLIP
(7-9D)
(9-7E)
OBJDB1
(7-2D)
OBJD
(7-6D)
(4-8E)DB
*OBJ1WB
CN2
25
*OBJ2WB
CN2
26
CN2
27
*OBJ1RB
CN2
28
*OBJ2RB
出図
59.7.31
データイースト
開発室
社外秘
KARATE CHAMP
DFV-2 PCB Pg 6 of 12

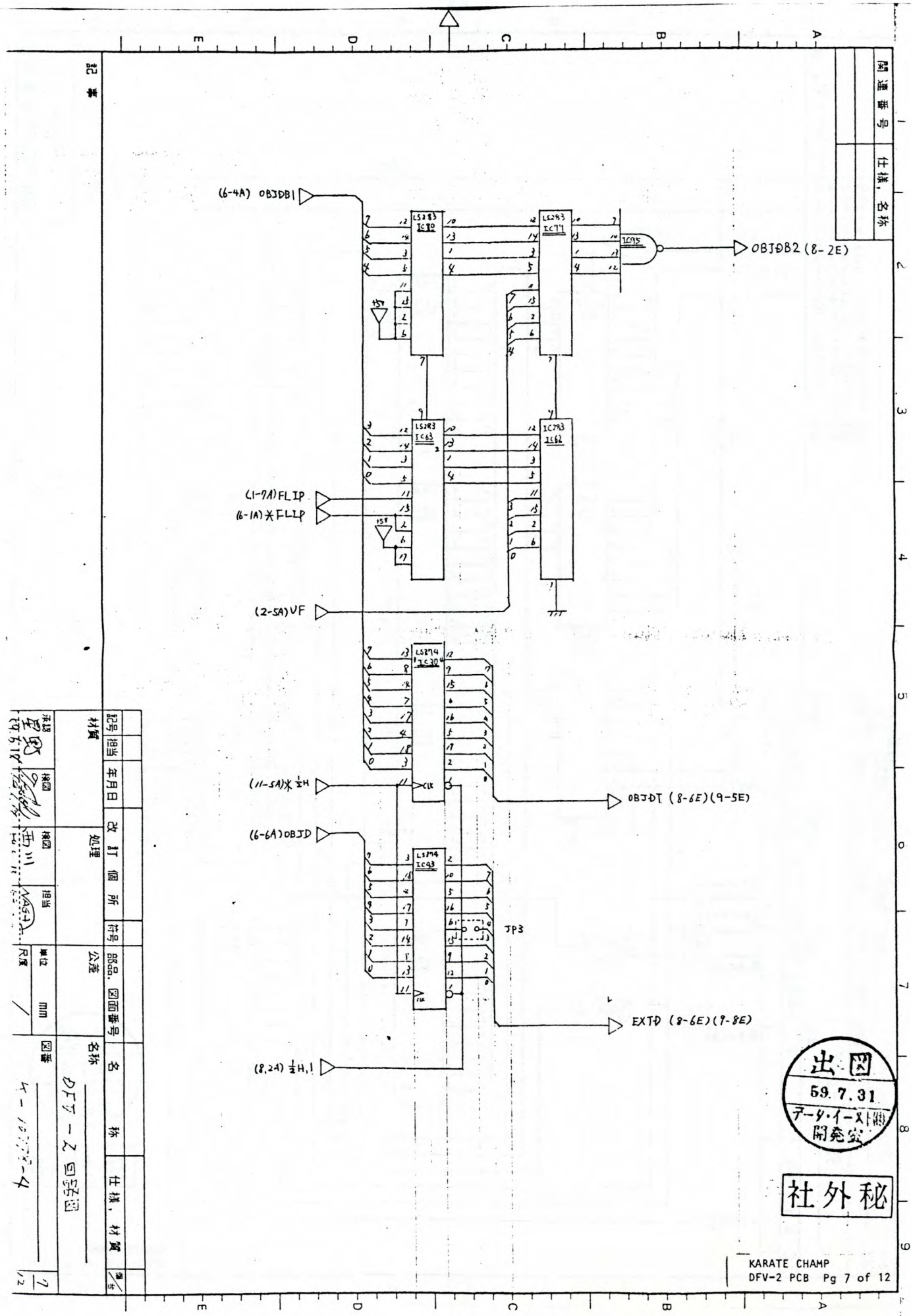
(6-4A) OBJDB1
OBJDB2 (8-2E)
(1-7A) FLIP
(6-1A) *FLLP
(2-5A) VF
(11-5A) *½H
OBJDT (8-6E)(9-5E)
(6-6A) OBJD
JP3
EXTD (8-6E)(9-8E)
(8,2A) ½H,1
LS283 IC80
LS283 IC77
LS283 IC63
LS283 IC62
LS174 IC30
LS174 IC93
1G95
出図
59.7.31
データ・イースト開発室
社外秘
KARATE CHAMP
DFV-2 PCB Pg 7 of 12
DFV-2 回路図
7/12

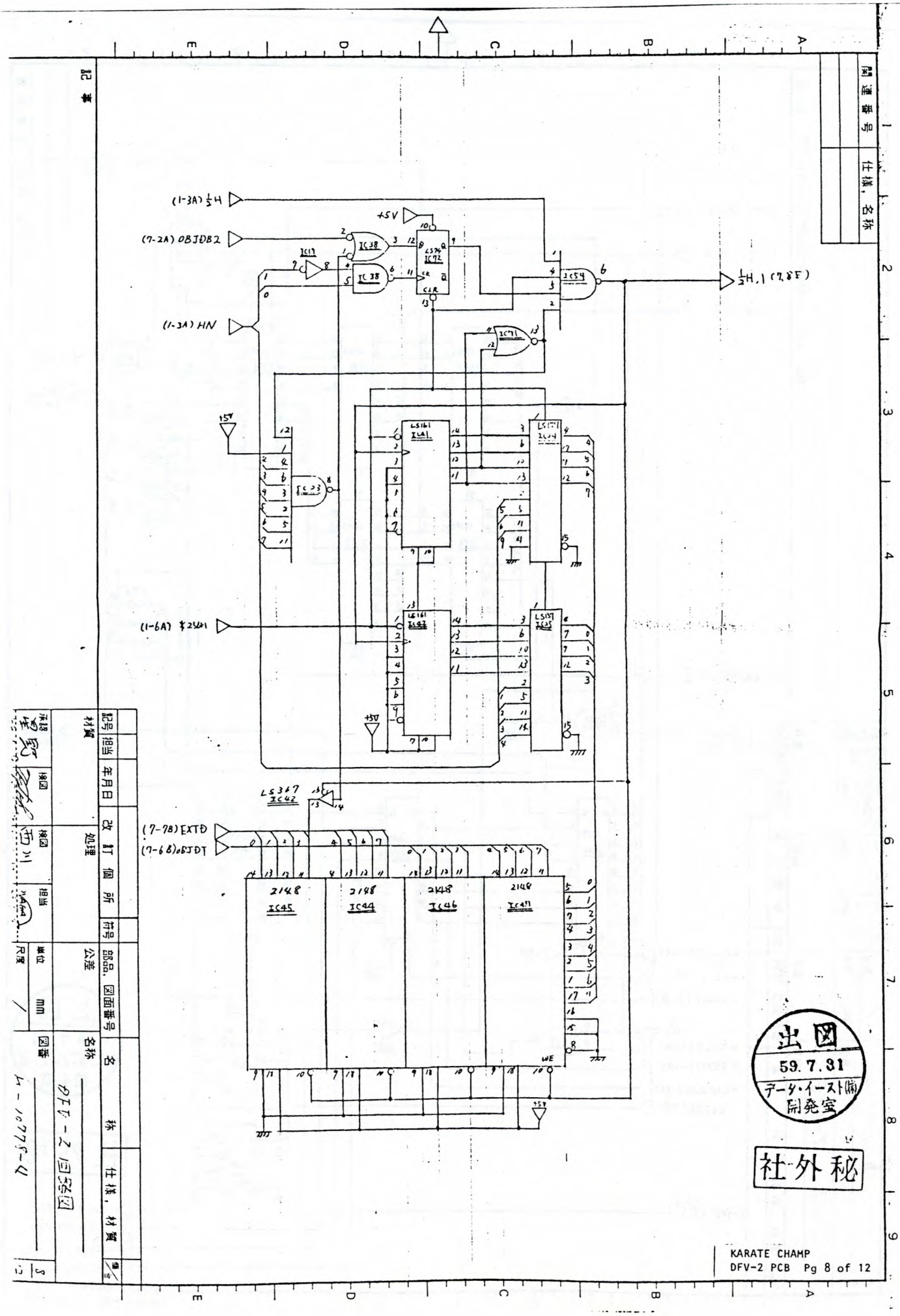
(1-3A) 1/2H
(7-2A) OBJEDB2
(1-3A) HN
(1-6A) ※2SW1
(7-7B) EXTD
(7-6B) OBJDT
1/2H,1 (7,8F)
+5V
IC38
IC38
IC19
IC72
IC59
IC71
IC23
IC41
IC47
IC43
IC42
IC45
IC44
IC46
IC47
2148
LS367
WE
出図
59.7.31
データ・イースト(株)
開発室
社外秘
KARATE CHAMP
DFV-2 PCB Pg 8 of 12

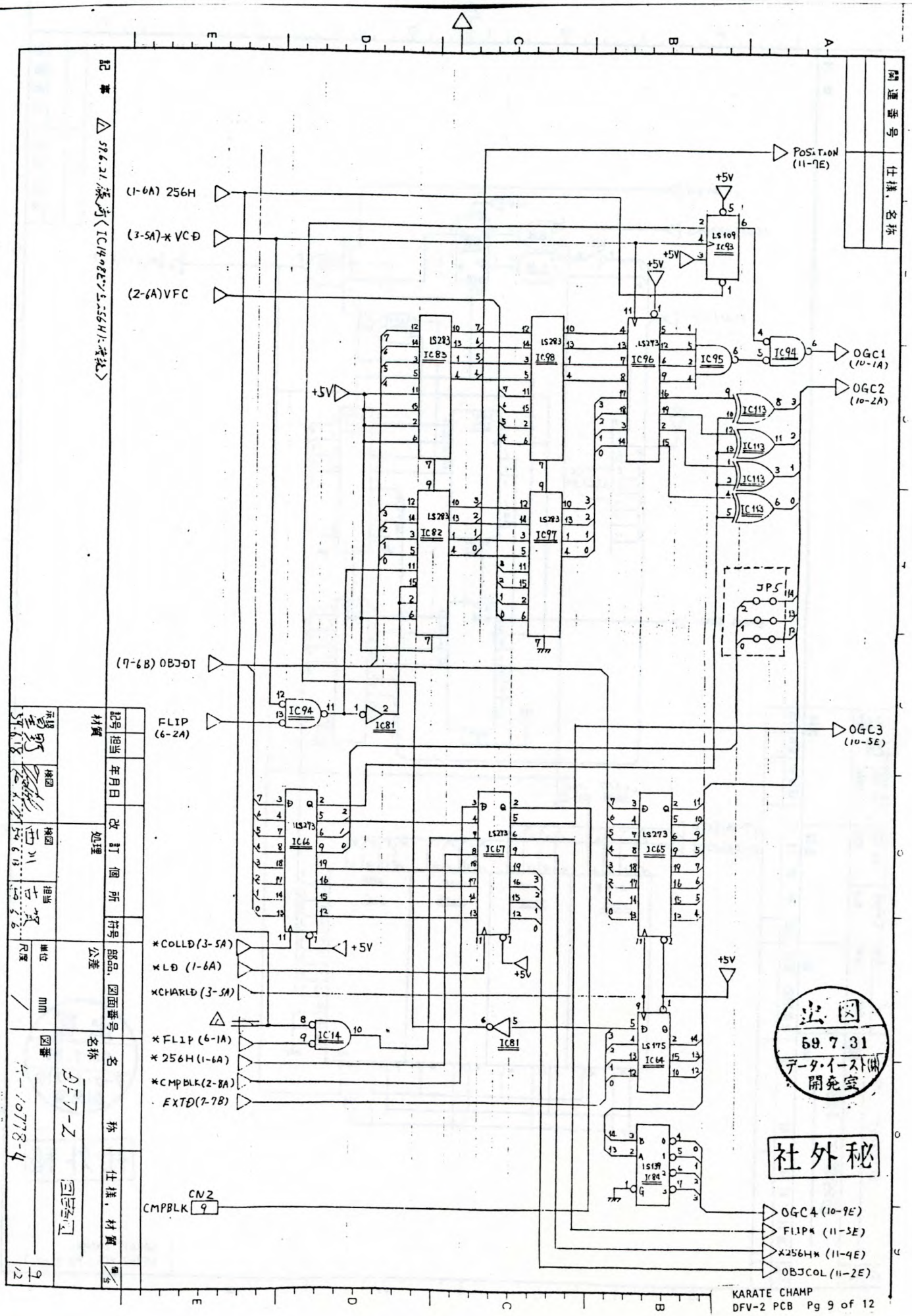
(1-6A) 256H
(3-5A)*VCD
(2-6A)VFC
(7-6B) OBJDT
FLIP (6-2A)
*COLLD(3-5A)
*LD (1-6A)
*CHARLD (3-5A)
*FLIP (6-1A)
*256H(1-6A)
*CMPBLK(2-8A)
EXTD(2-7B)
CMPBLK
CN2
9
POSITION (11-7E)
OGC1 (10-1A)
OGC2 (10-2A)
OGC3 (10-3E)
OGC4 (10-9E)
FLIP* (11-3E)
256H (11-4E)
OBJCOL (11-2E)
JP5
+5V
IC83
IC82
IC98
IC97
IC96
IC95
IC94
IC113
IC93
IC81
IC14
IC66
IC67
IC65
IC64
IC89
LS283
LS273
LS109
LS175
LS139
社外秘
59.7.31
データ・イースト(株)
開発室
KARATE CHAMP
DFV-2 PCB Pg 9 of 12

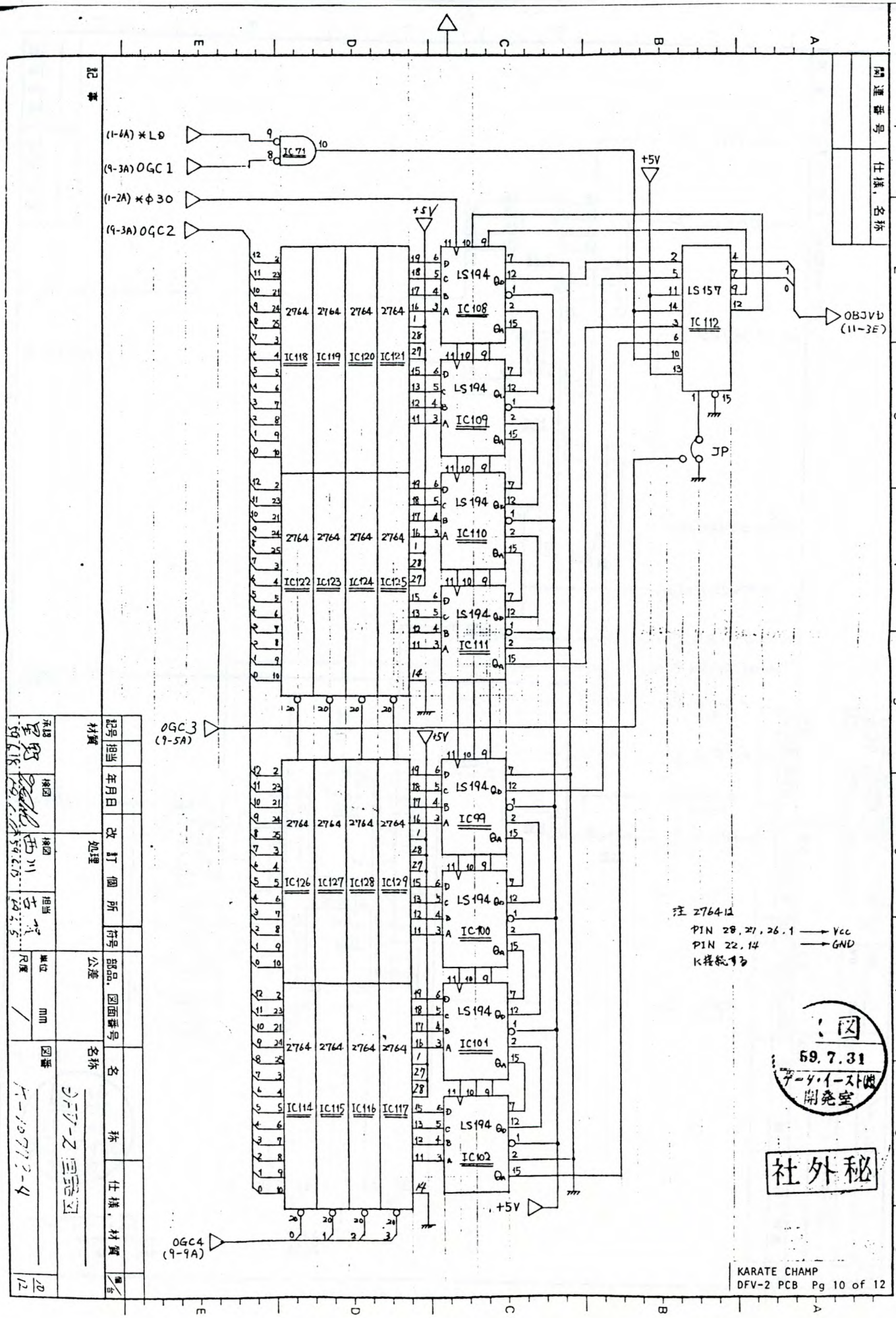
(1-6A) *LD
(9-3A) OGC1
(1-2A) *φ30
(9-3A) OGC2
OGC3 (9-5A)
OGC4 (9-9A)
IC71
+5V
2764
IC118 IC119 IC120 IC121
IC122 IC123 IC124 IC125
IC126 IC127 IC128 IC129
IC114 IC115 IC116 IC117
LS194
IC108 IC109 IC110 IC111
IC99 IC100 IC101 IC102
LS157
IC112
OBJVD (11-3E)
JP
注 2764は
PIN 28, 27, 26, 1 → Vcc
PIN 22, 14 → GND
に接続する
図
59.7.31
データ・イースト㈱
開発室
社外秘
KARATE CHAMP
DFV-2 PCB Pg 10 of 12

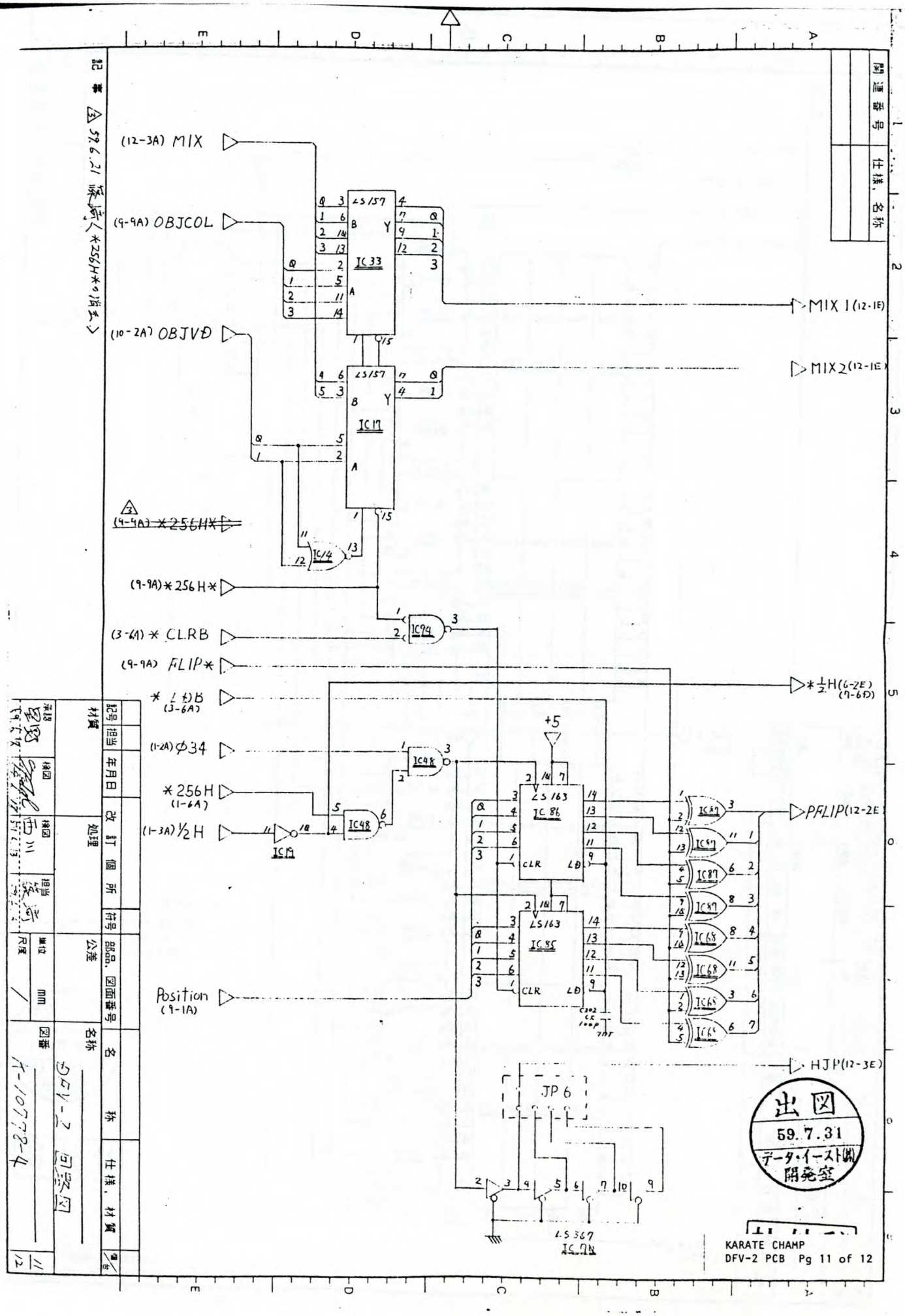
(12-3A) MIX
(9-9A) OBJCOL
(10-2A) OBJVD
LS157
IC33
IC17
MIX 1 (12-1E)
MIX2 (12-1E)
(9-9A)*256H*
(3-6A) * CLRB
(9-9A) FLIP*
*1/2H (6-2E) (7-6D)
(1-2A) φ34
*256H (1-6A)
(1-3A) 1/2H
IC48
IC49
IC94
+5
LS163
IC86
IC85
CLR
LD
Position (9-1A)
PFLIP (12-2E)
HJP (12-3E)
JP 6
LS367
IC74
出図
59.7.31
データ・イースト(株)
開発室
KARATE CHAMP
DFV-2 PCB Pg 11 of 12

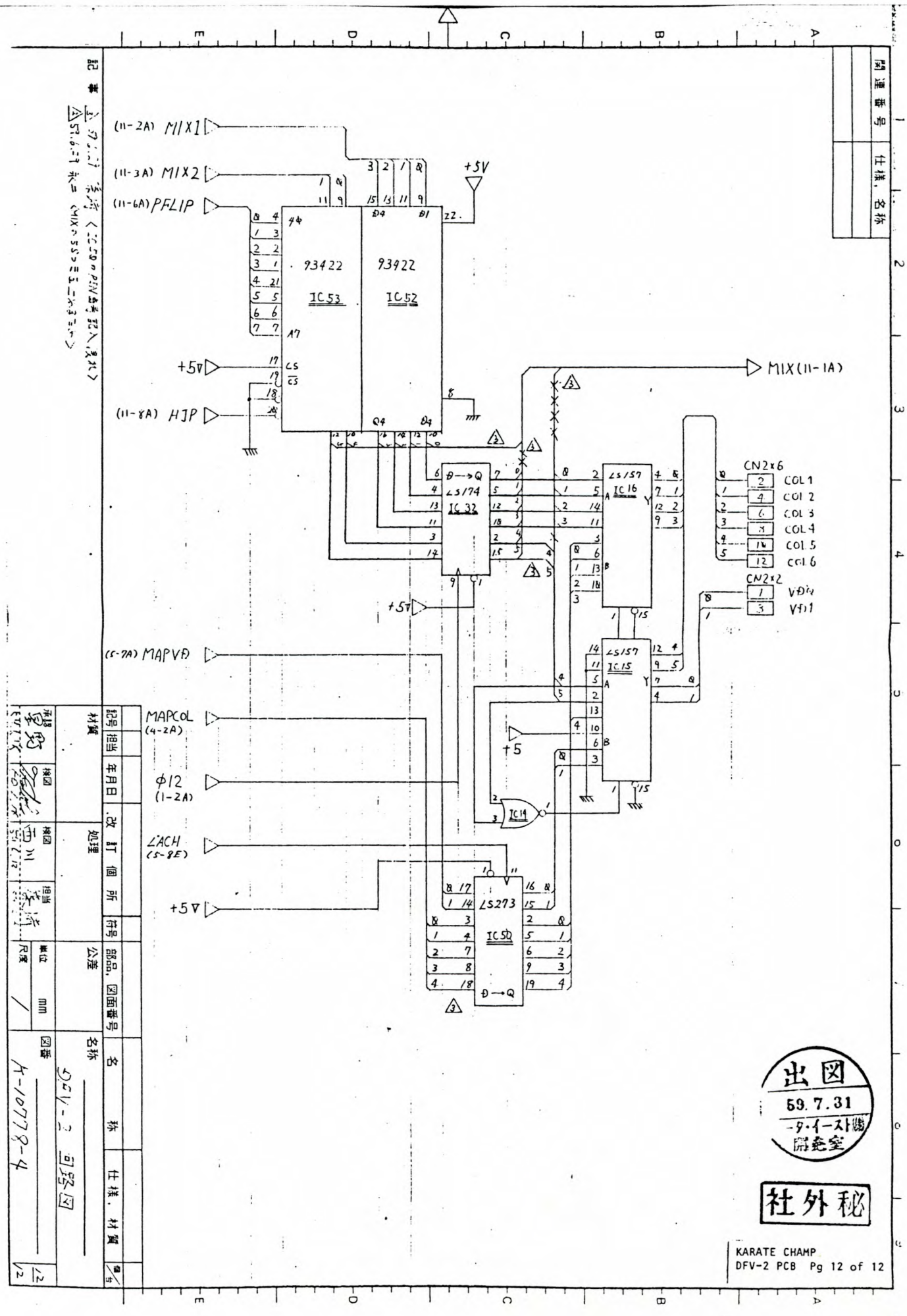
(11-2A) MIX1
(11-3A) MIX2
(11-6A) PFLIP
+5V
93422
IC53
93422
IC52
+5V
(11-8A) HJP
MIX(11-1A)
D→Q
LS174
IC32
LS157
IC16
CN2×6
COL1
COL2
COL3
COL4
COL5
COL6
CN2×2
VD1
VD1
+5V
(5-7A) MAPVD
LS157
IC15
MAPCOL
(4-2A)
+5
φ12
(1-2A)
IC14
LACH
(5-8E)
+5V
LS273
IC50
D→Q
出図
59.7.31
ナムコ・イーストビル
開発室
社外秘
KARATE CHAMP
DFV-2 PCB Pg 12 of 12

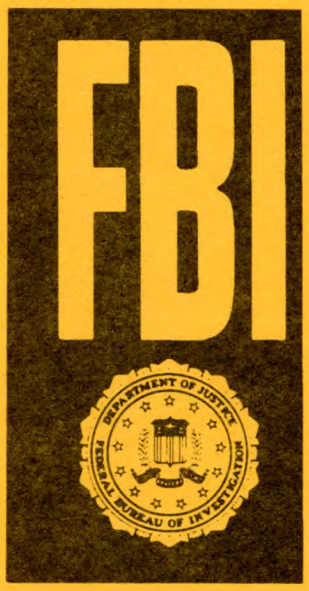

WARNING

Federal law provides severe civil and criminal penalties for the unauthorized reproduction, distribution, or exhibition of copyrighted audiovisual works and video games.

The Federal Bureau of Investigation investigates allegations of criminal copyright infringement.