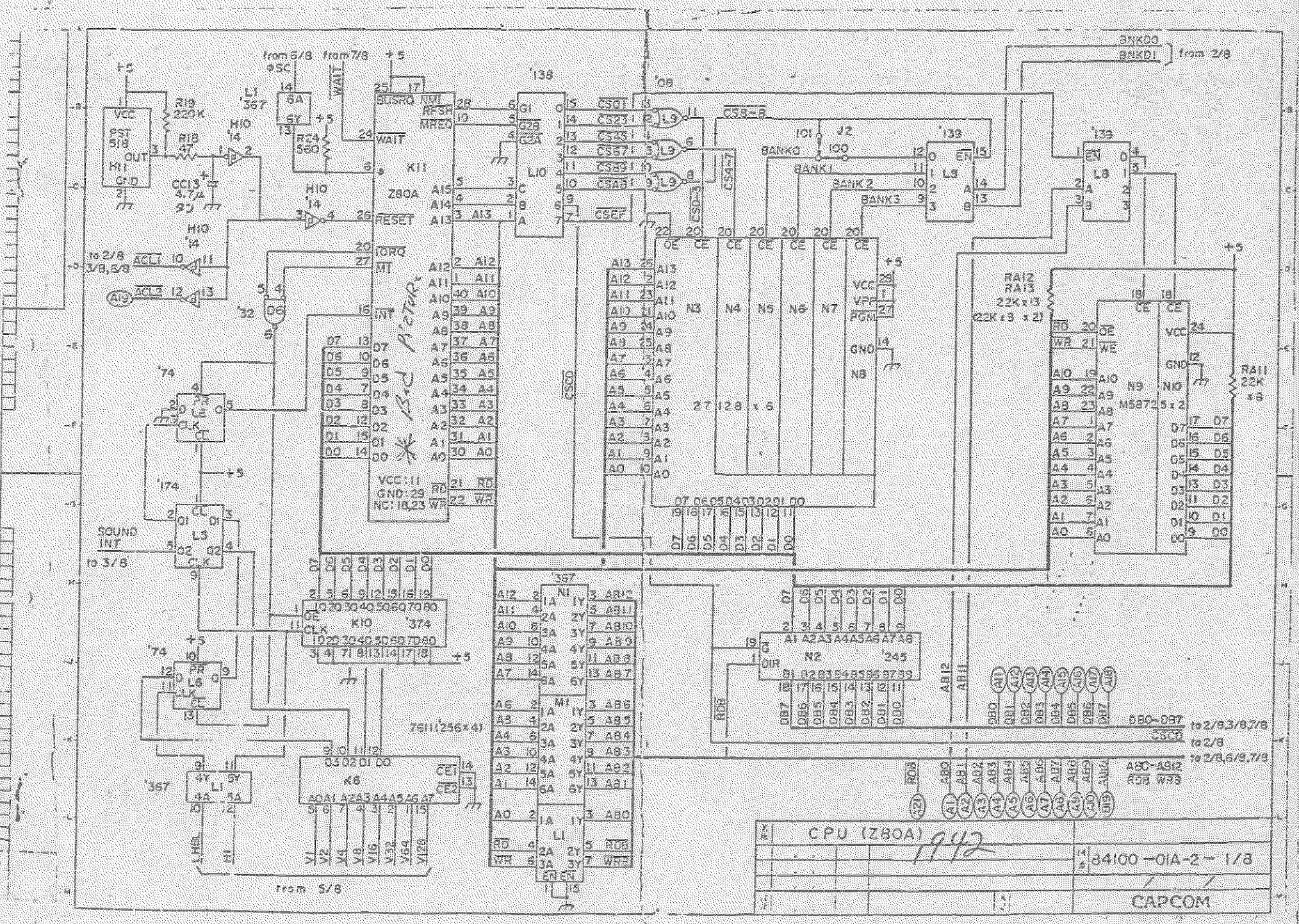
CPU (Z80A)
84100-01A-2 1/8
CAPCOM
Z80A
K11
L10
N3
N4
N5
N6
N7
N8
N9
N10
MS8725 x 2
N1
N2
M1
L1
K10
K6
L3
L6
L8
L9
J2
BANK0
BANK1
BANK2
BANK3
BNKD0
BNKD1
from 2/8
from 6/8
from 7/8
from 5/8
WAIT
BUSRQ
NMI
RFSH
MREQ
RESET
IORQ
MI
INT
RD
WR
CSOT
CS32
CS25
CS67
CS89
CSAB
CSEF
CS38-B
CSD-3
CS4-7
CSCD
RA12
RA13
22K x 13
22K x 9 x 2
RA11
22K x 8
SOUND INT
to 3/8
to 2/8 3/8, 6/8
DB0-DB7
to 2/8,3/8,7/8
to 2/8
to 2/8,6/8,7/8
A8-A12
RD WR
7611 (256x4)
2716 PICTURE

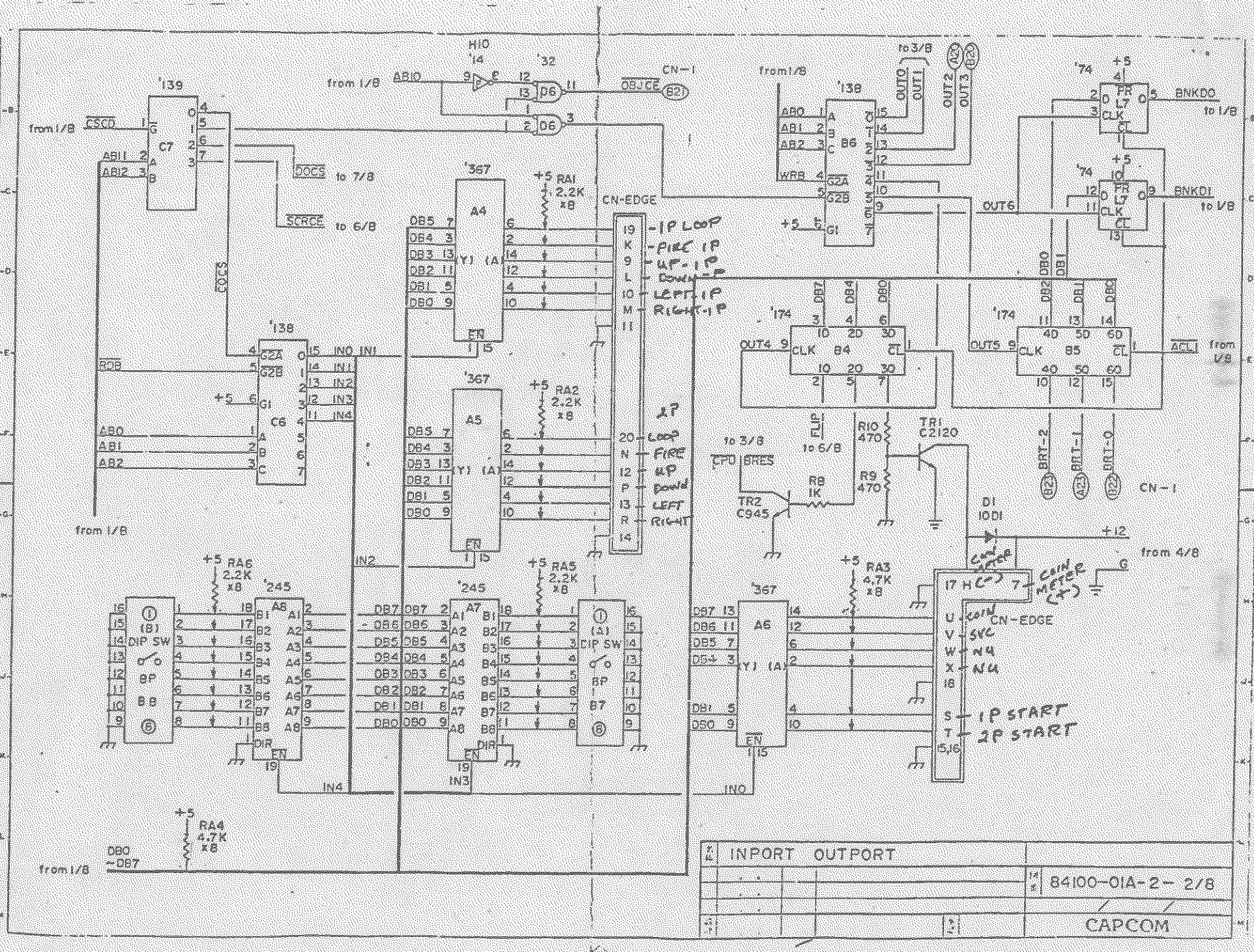
C7
C6
A4
A5
A6
A7
A8
B4
B5
B6
B7
B8
CN-EDGE
CN-1
-1P LOOP
-FIRE 1P
UP-1P
DOWN-1P
LEFT-1P
RIGHT-1P
2P
LOOP
FIRE
UP
DOWN
LEFT
RIGHT
COIN METER (C)
COIN METER (X)
COIN
SVC
NU
NU
1P START
2P START
DIP SW
BP
TR1 C2120
TR2 C945
D1 1001
R8 1K
R9 470
R10 470
RA1 2.2K x8
RA2 2.2K x8
RA3 4.7K x8
RA4 4.7K x8
RA5 2.2K x8
RA6 2.2K x8
BNKD0
BNKD1
BRT-2
BRT-1
BRT-0
ACL
FLIP
CPU RES
INPORT OUTPORT
84100-01A-2- 2/8
CAPCOM

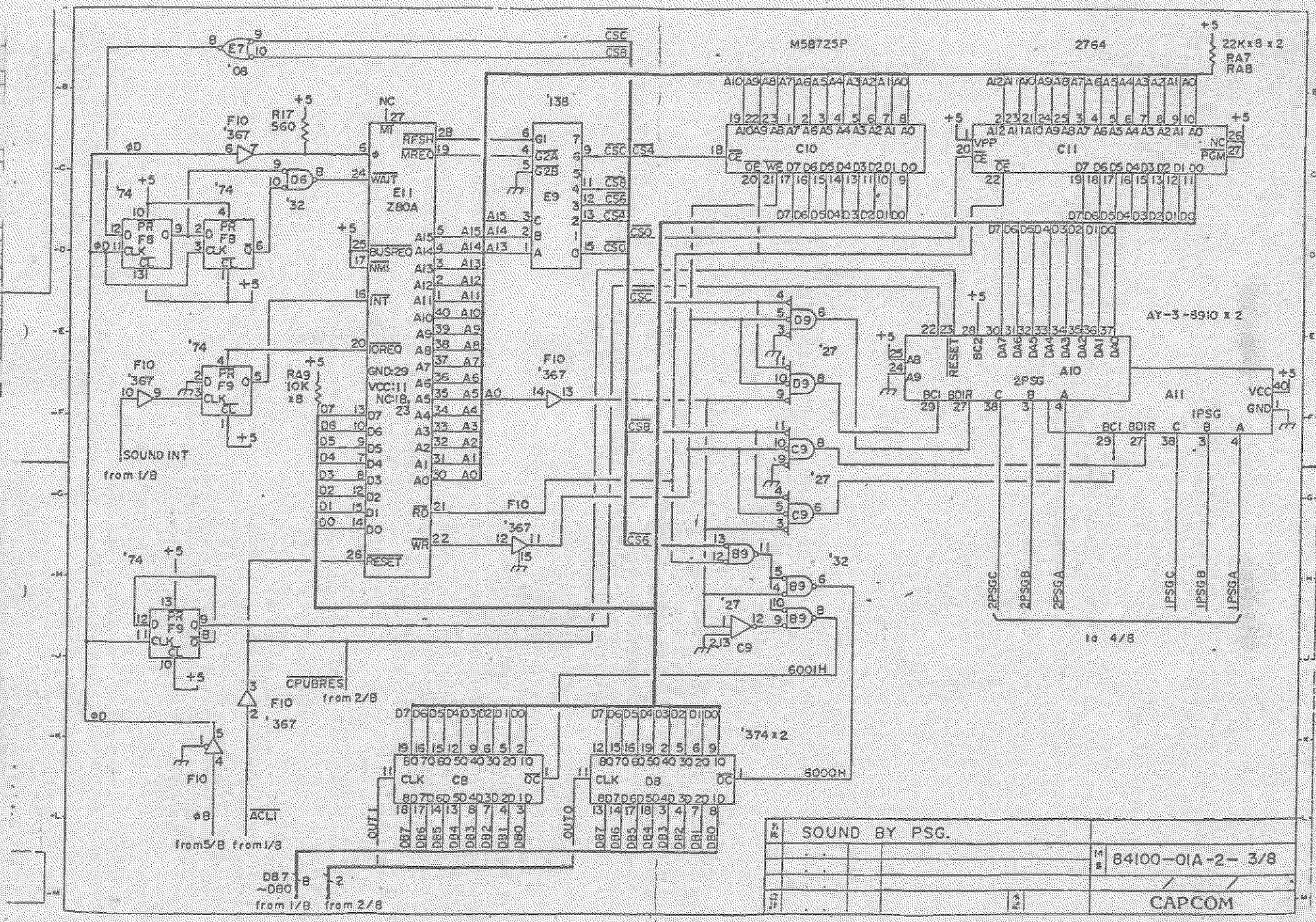
M58725P
2764
22K x 8 x 2
RA7
RA8
'138
E9
E11
Z80A
C10
C11
AY-3-8910 x 2
A10
A11
2PSG
1PSG
R17
560
RA9
10K
x8
SOUND INT
from 1/8
CPUBRES
from 2/8
ACLI
from 5/8
from 1/8
D87
~D80
from 1/8
from 2/8
'374 x 2
C8
D8
6001H
6000H
to 4/8
SOUND BY PSG.
84100-01A-2- 3/8
CAPCOM

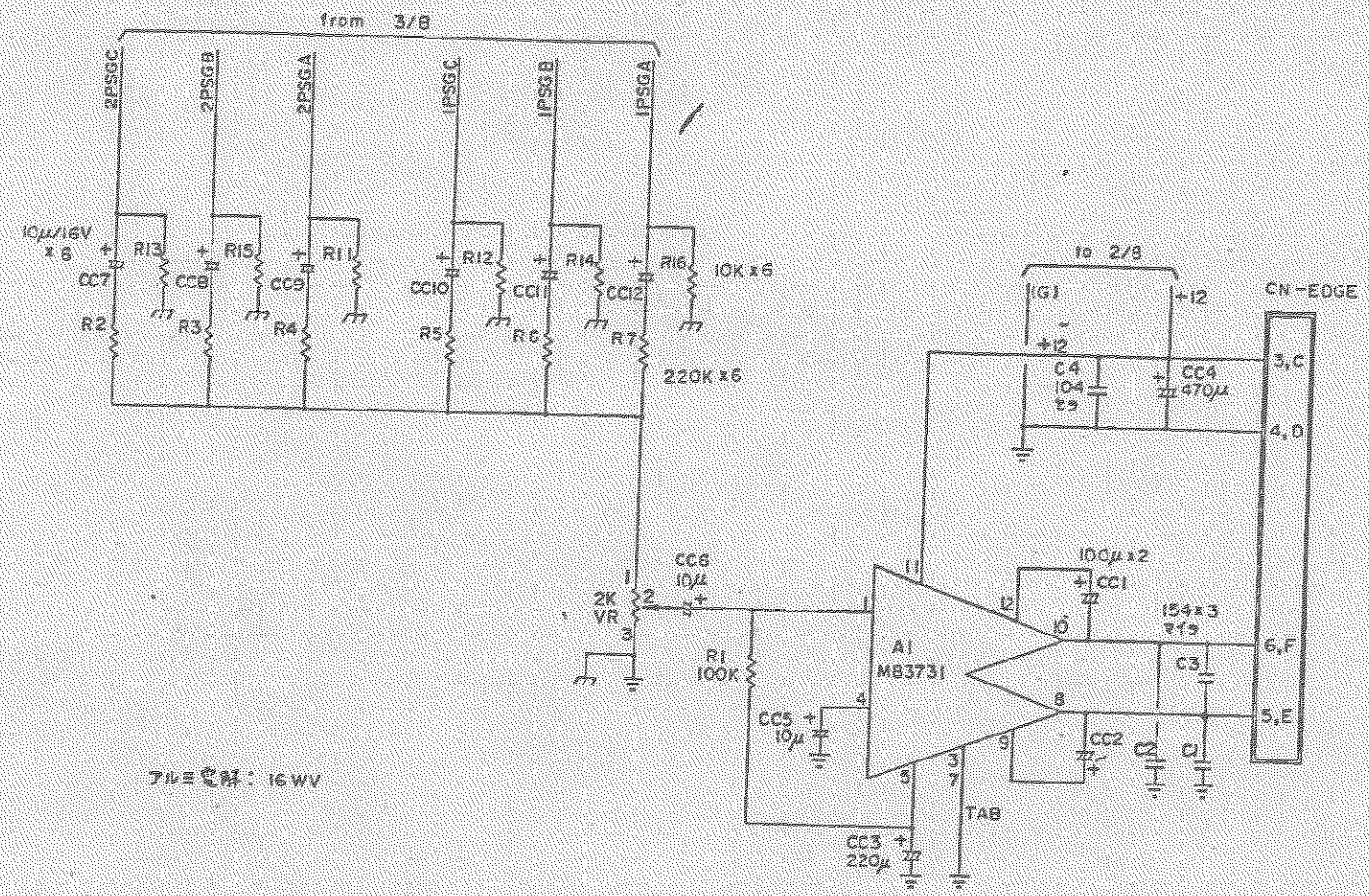

	MAIN AMP.		
			84100 − 01A-2 − 4/8
			CAPCOM

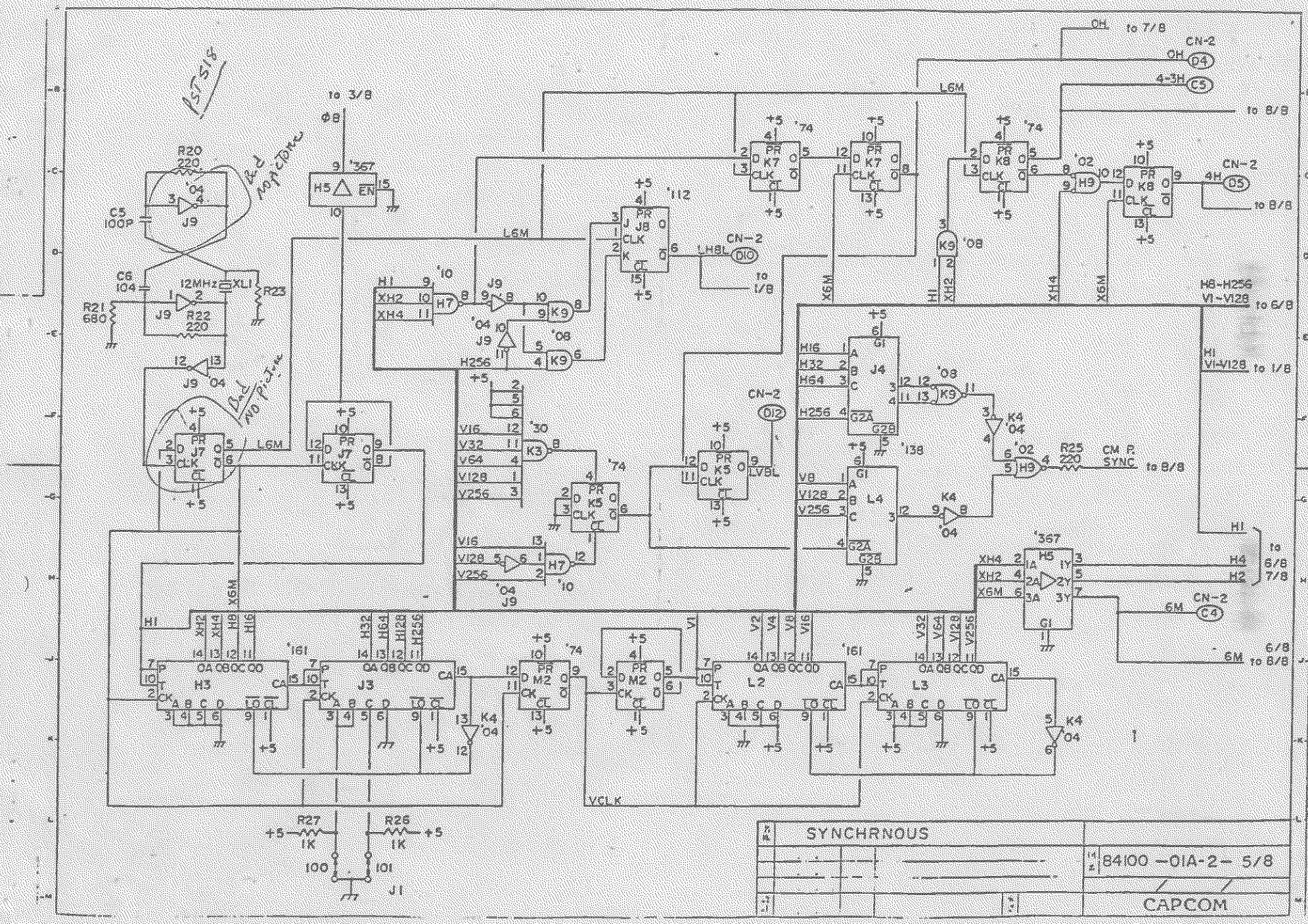
SYNCHRNOUS
84100 -01A-2- 5/8
CAPCOM
to 3/8
to 7/8
to 8/8
to 1/8
to 6/8
to 6/8 7/8
CN-2
CM P. SYNC
12MHz
XL1
R20 220
R21 680
R22 220
R23
C5 100P
C6 104
R25 220
R26 1K
R27 1K
J1
H3
J3
L2
L3
L4
J4
J7
J8
J9
K3
K4
K5
K7
K8
K9
H5
H7
H9
'161
'367
'74
'112
'30
'138
'04
'02
'08
'10

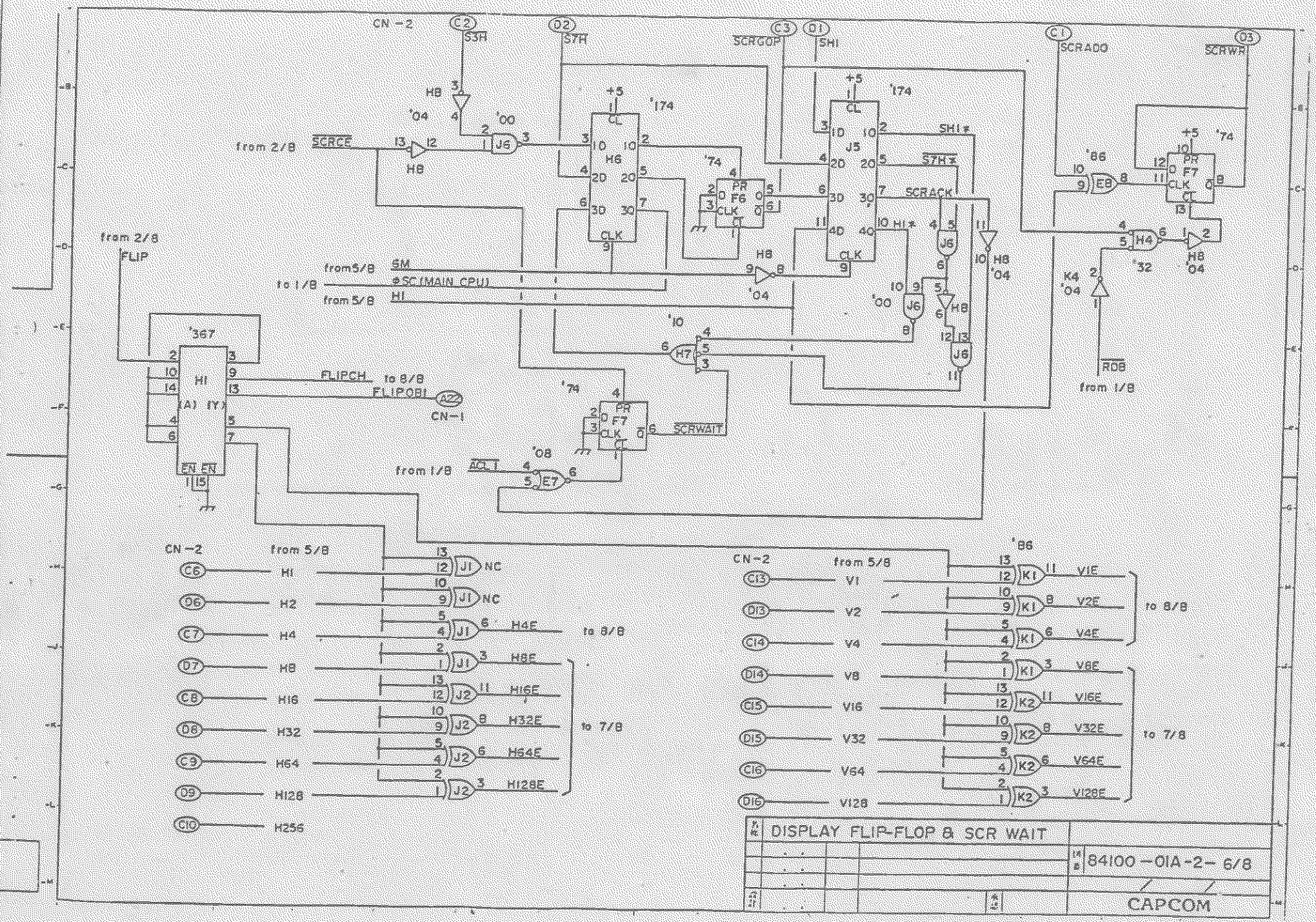
CN-2
C2 S3H
D2 S7H
C3 SCRGOP
D1 SH1
C1 SCRADO
D3 SCRWR
from 2/8 SCRCE
H8
'04
'00
J6
H6
'174
'74
PR F6 CLK CL
J5
SH1*
S7H*
SCRACK
HI*
PR F7 CLK CL
'86
E8
H4
'32
K4 '04
RDB
from 1/8
from 2/8 FLIP
from 5/8 SM
to 1/8 ΦSC (MAIN CPU)
from 5/8 HI
'367
HI
FLIPCH to 8/8
FLIPOB1 A22 CN-1
EN EN
'10
H7
SCRWAIT
'08
from 1/8 ACL 1
E7
CN-2 from 5/8
C6 HI J1 NC
D6 H2 J1 NC
C7 H4 J1 6 H4E to 8/8
D7 H8 J1 3 H8E
C8 H16 J2 11 H16E
D8 H32 J2 8 H32E to 7/8
C9 H64 J2 6 H64E
D9 H128 J2 3 H128E
C10 H256
CN-2 from 5/8
C13 V1 K1 11 V1E
D13 V2 K1 8 V2E to 8/8
C14 V4 K1 6 V4E
D14 V8 K1 3 V8E
C15 V16 K2 11 V16E
D15 V32 K2 8 V32E to 7/8
C16 V64 K2 6 V64E
D16 V128 K2 3 V128E
DISPLAY FLIP-FLOP & SCR WAIT
84100-01A-2-6/8
CAPCOM

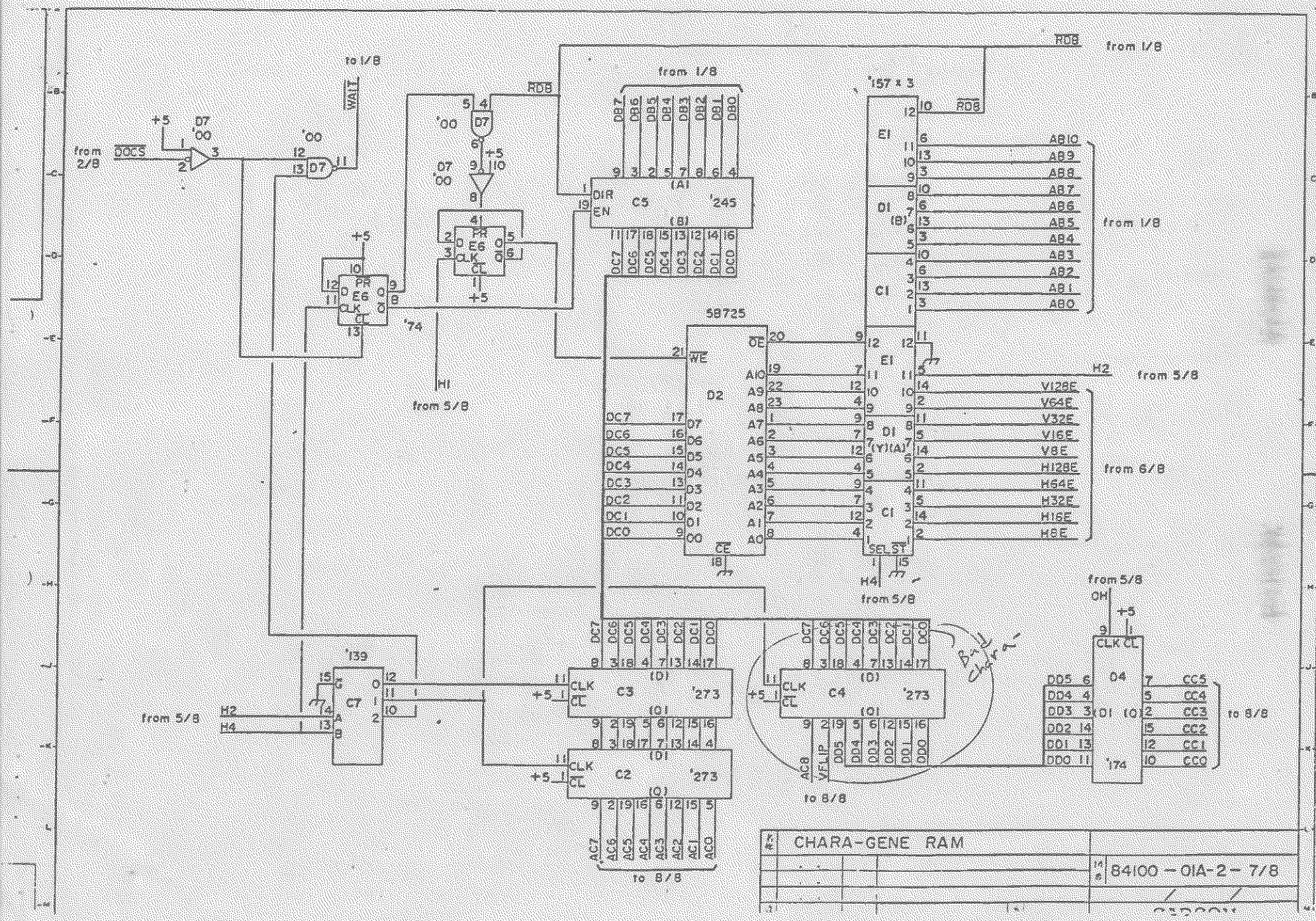
CHARA-GENE RAM
84100-01A-2-7/8
from 2/8
DOCS
to 1/8
WAIT
RDB
from 1/8
'157 x 3
C5
'245
58725
D2
C1
D1
E1
from 5/8
H1
H2
H4
from 6/8
V128E
V64E
V32E
V16E
V8E
H128E
H64E
H32E
H16E
H8E
C7
'139
C3
C2
C4
'273
D4
'174
to 8/8
CC5
CC4
CC3
CC2
CC1
CC0
Bit Clock

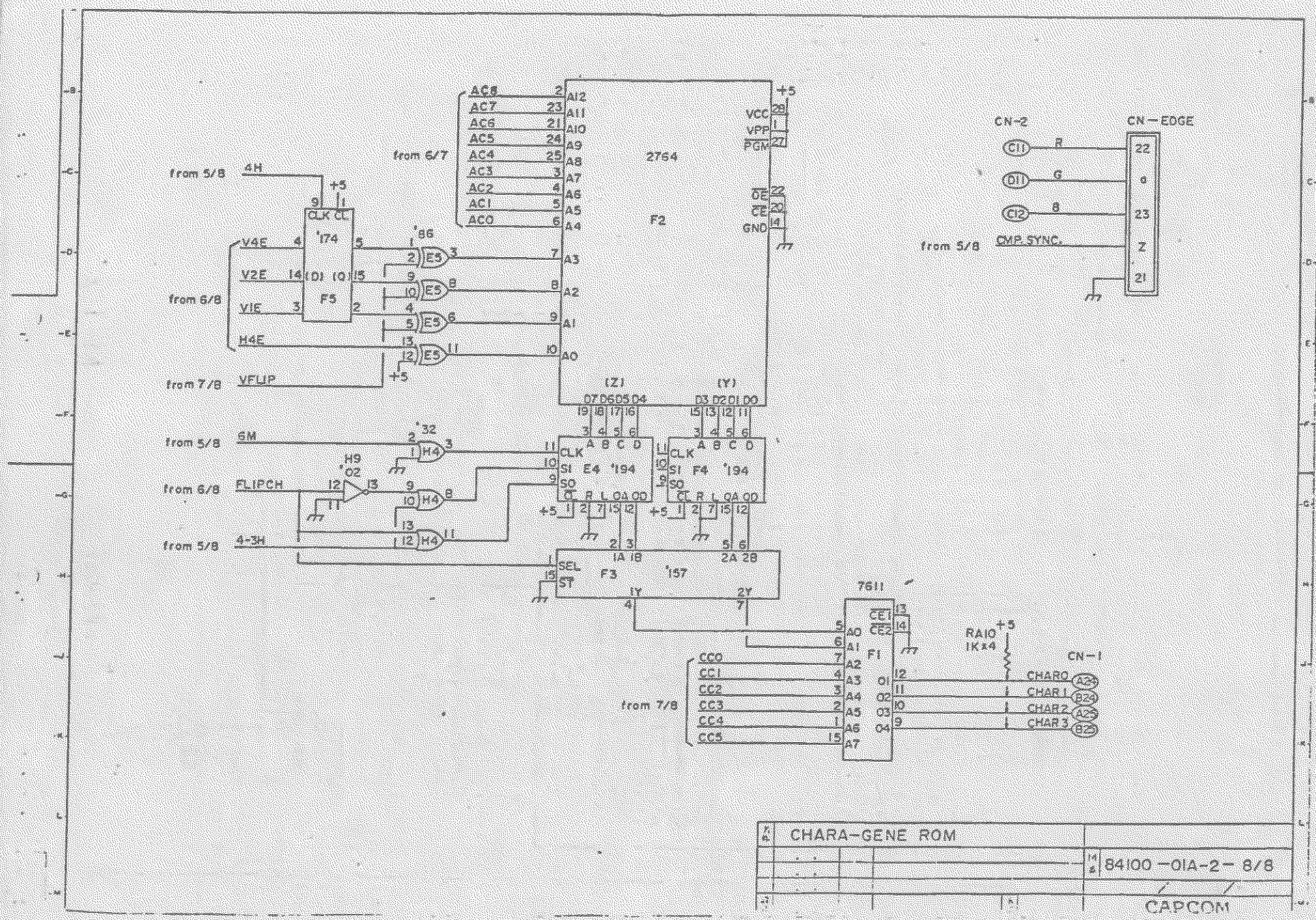
CHARA-GENE ROM
84100 -01A-2- 8/8
CAPCOM
2764
F2
VCC
VPP
PGM
GND
CE
OE
AC8
AC7
AC6
AC5
AC4
AC3
AC2
AC1
AC0
from 6/7
from 5/8
4H
'174
F5
V4E
V2E
V1E
H4E
from 6/8
'86
E5
from 7/8
VFLIP
+5
CN-2
CN-EDGE
CI1
DI1
CI2
R
G
B
CMP. SYNC.
from 5/8
6M
'32
H4
H9
'02
FLIPCH
from 6/8
4-3H
from 5/8
E4
'194
F4
'194
CLK
SI
SO
F3
'157
SEL
ST
7611
F1
CE1
CE2
CC0
CC1
CC2
CC3
CC4
CC5
from 7/8
RA10
1K x 4
CN-1
CHAR0
CHAR1
CHAR2
CHAR3

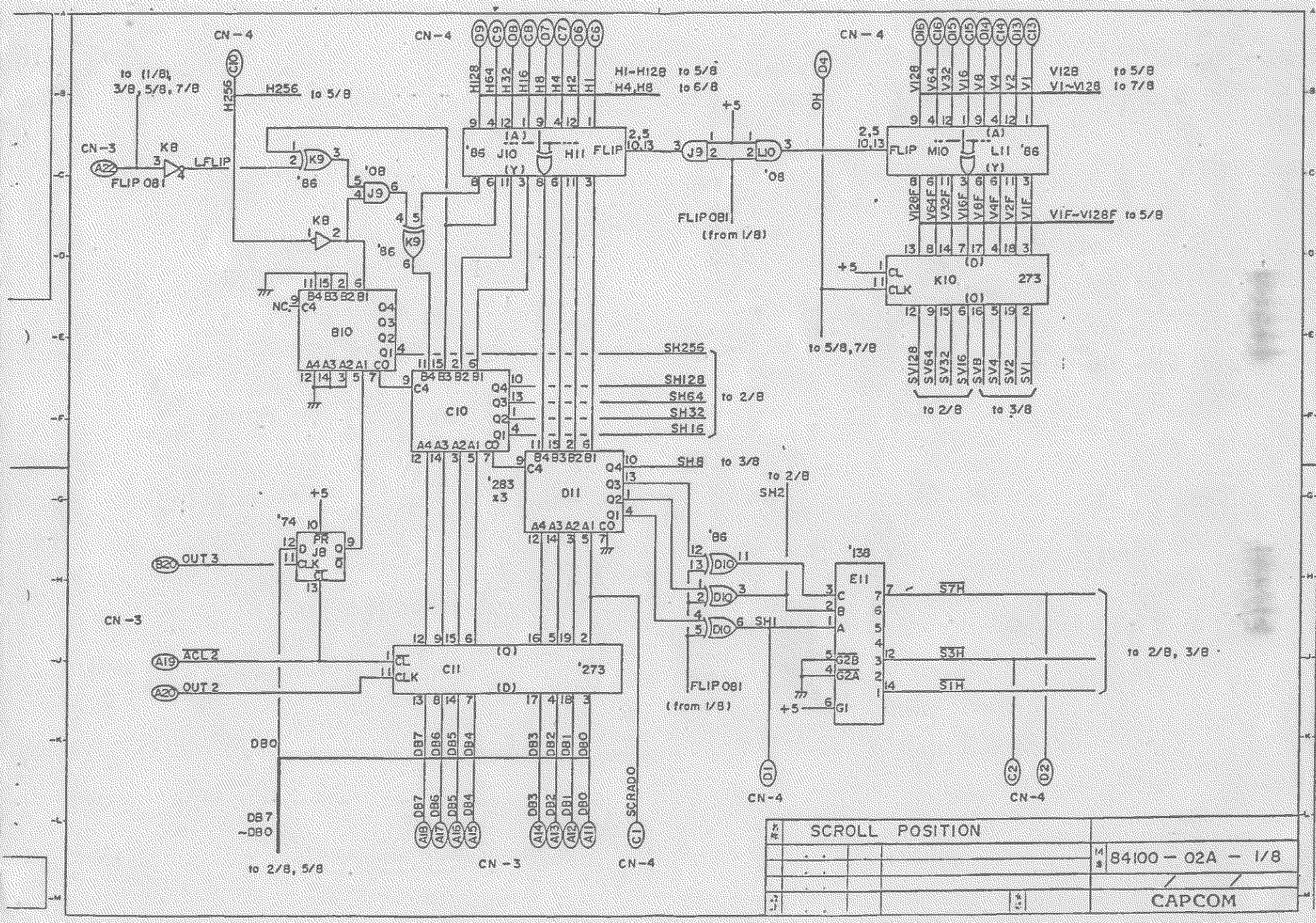
CN-4
CN-3
to (1/8), 3/8, 5/8, 7/8
H256
to 5/8
H1-H128
to 5/8
H4, H8
to 6/8
V128
to 5/8
V1-V128
to 7/8
V1F-V128F
to 5/8
FLIP 08I
LFLIP
FLIP 08I (from 1/8)
J10
H11
FLIP
M10
L11
K10
273
B10
C10
D11
E11
C11
'283 x3
'74
'86
'08
'138
SH256
SH128
SH64
SH32
SH16
SH8
SH2
SH1
to 2/8
to 3/8
to 5/8, 7/8
S7H
S3H
S1H
to 2/8, 3/8
OUT 3
OUT 2
ACL 2
DB0
DB7 -DB0
to 2/8, 5/8
SCRADO
SCROLL POSITION
84100 - 02A - 1/8
CAPCOM

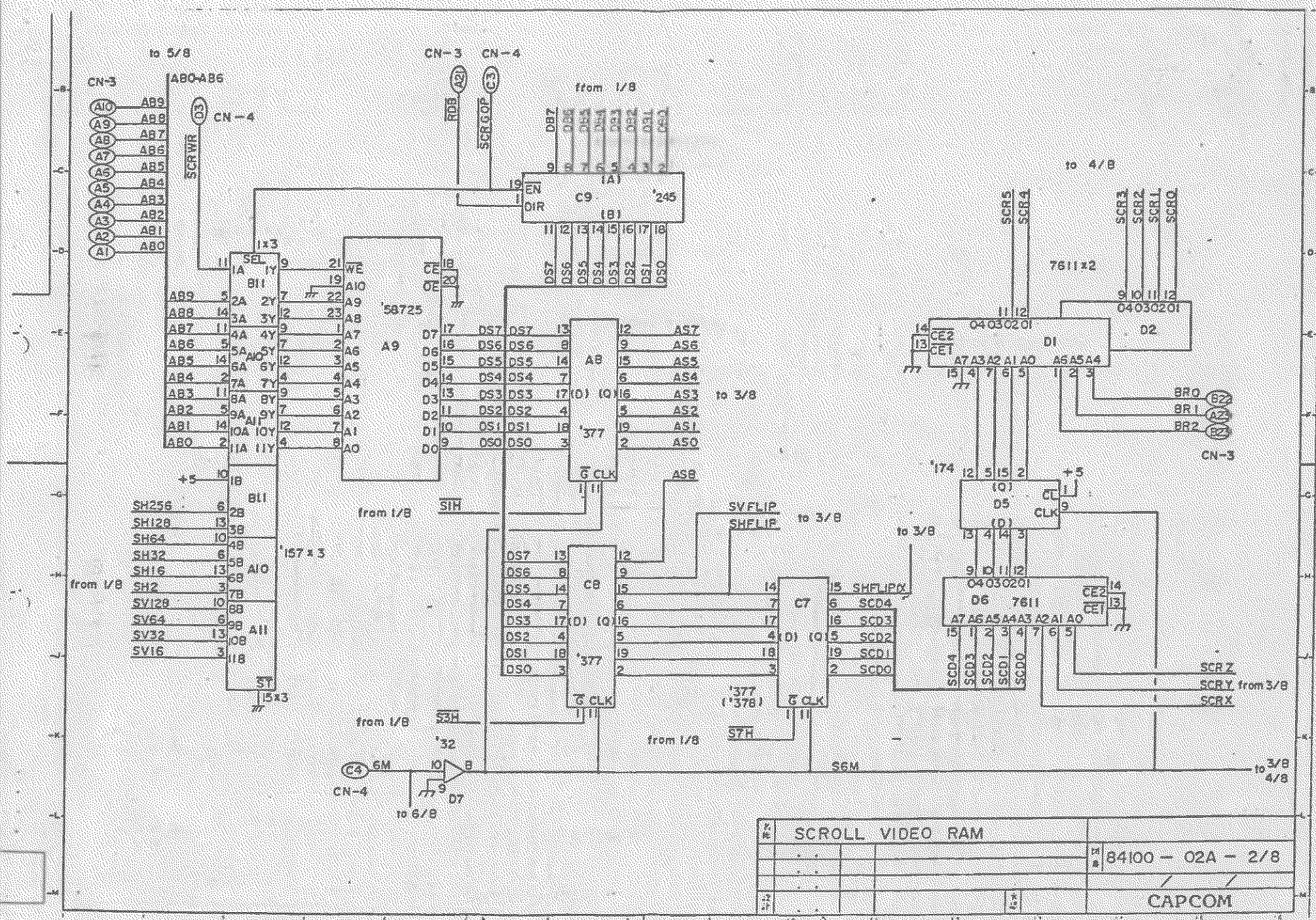
SCROLL VIDEO RAM
84100 — 02A — 2/8
CAPCOM
to 5/8
CN-3
CN-4
A80-A86
SCRWR
RDB
SCRCOP
from 1/8
C9
'245
EN
DIR
(A)
(B)
DB7
DS7 DS6 DS5 DS4 DS3 DS2 DS1 DS0
B11
SEL
1x3
'157 x 3
A10
A11
ST
15x3
'58725
A9
WE
CE
OE
A8
'377
CLK
SIH
SVFLIP
SHFLIP
to 3/8
C8
C7
SHFLIPX
SCD4
SCD3
SCD2
SCD1
SCD0
SS3H
SS7H
'32
6M
D7
to 6/8
S6M
to 3/8
4/8
to 4/8
SCR5
SCR4
SCR3
SCR2
SCR1
SCR0
7611x2
04030201
D1
D2
D6
7611
CE2
CE1
BR0
BR1
BR2
'174
D5
CL
SCRZ
SCRY
SCRX
from 3/8

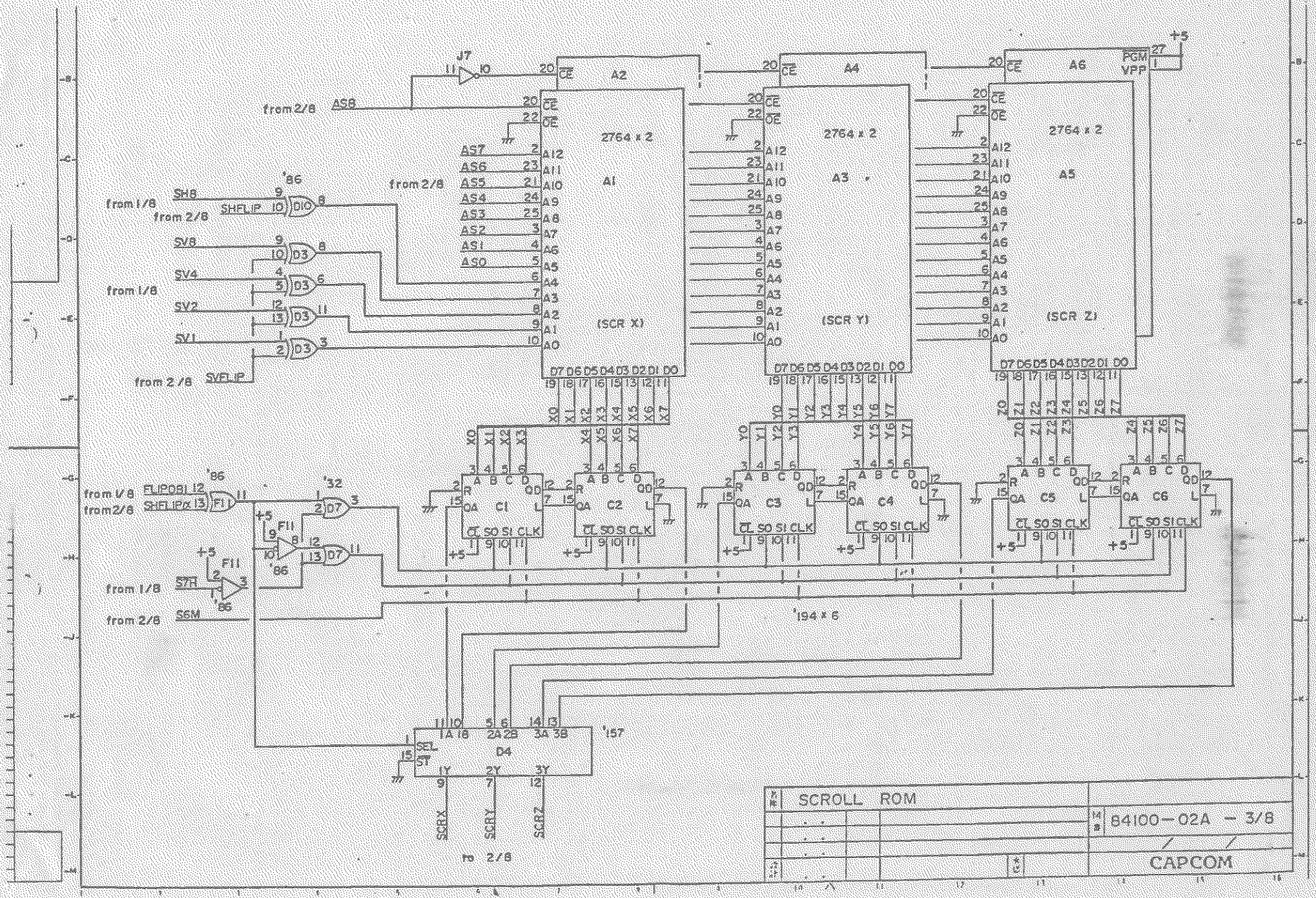
SCROLL ROM
84100-02A - 3/8
CAPCOM
2764 x 2
A1
A2
A3
A4
A5
A6
(SCR X)
(SCR Y)
(SCR Z)
'194 x 6
C1
C2
C3
C4
C5
C6
'157
D4
'86
'32
'10
J7
from 2/8
from 1/8
SH8
SHFLIP
SV8
SV4
SV2
SV1
SVFLIP
FLIPOBJ
S7H
S6M
AS8
AS7
AS6
AS5
AS4
AS3
AS2
AS1
AS0
SCRX
SCRY
SCRZ
to 2/8
+5

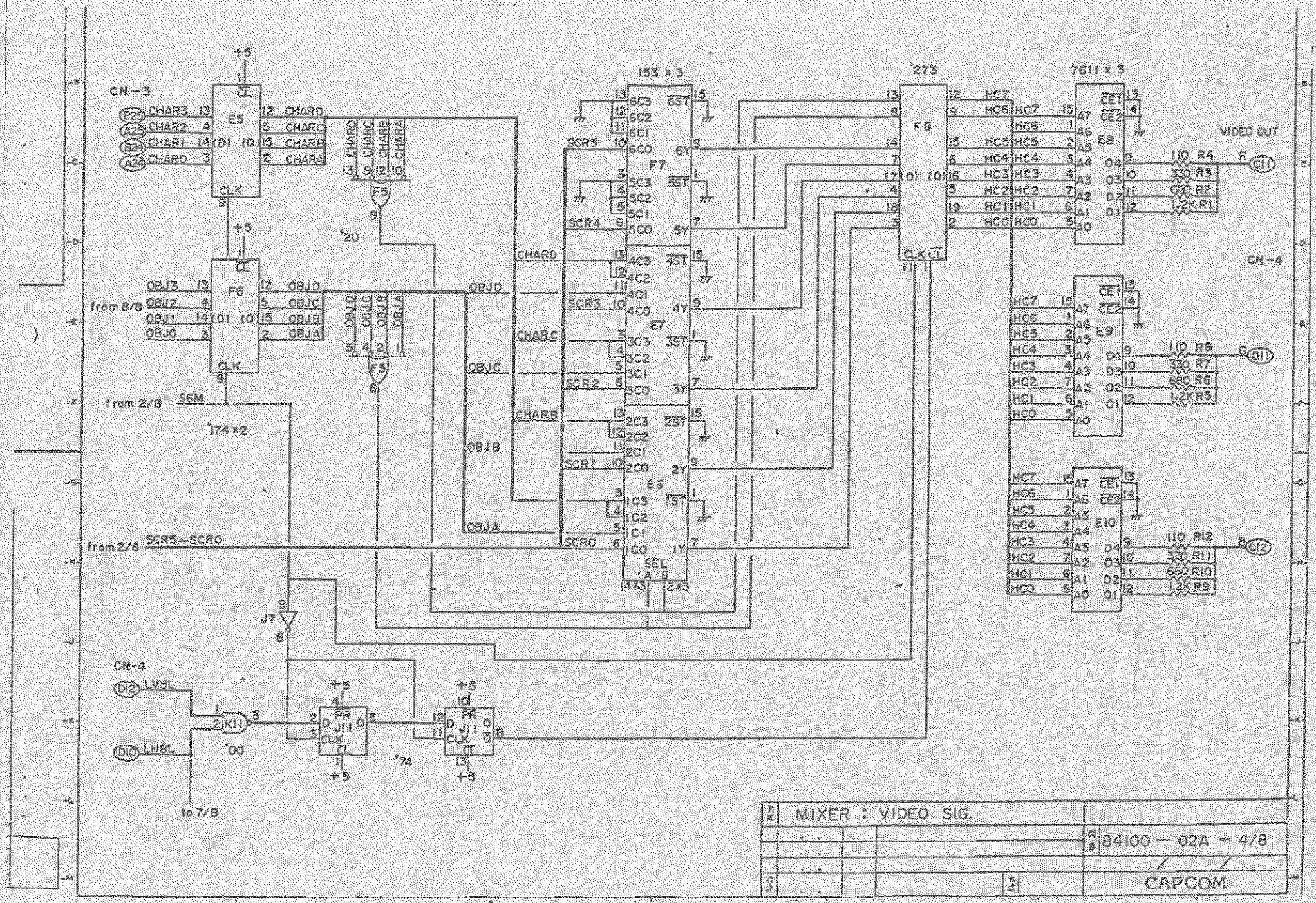
CN-3
CHAR3
CHAR2
CHAR1
CHAR0
E5
CHARD
CHARC
CHARB
CHARA
'20
F6
OBJ3
OBJ2
OBJ1
OBJ0
OBJD
OBJC
OBJB
OBJA
from 8/8
from 2/8
S6M
'174 x2
from 2/8
SCR5~SCR0
J7
CN-4
LVBL
LHBL
K11
'00
'74
to 7/8
153 x 3
F7
E7
E6
SCR5
SCR4
SCR3
SCR2
SCR1
SCR0
SEL
14x3
2x3
'273
F8
HC7
HC6
HC5
HC4
HC3
HC2
HC1
HC0
7611 x 3
E8
E9
E10
VIDEO OUT
R4
R3
R2
R1
R8
R7
R6
R5
R12
R11
R10
R9
CN-4
CI1
CI2
MIXER : VIDEO SIG.
84100 — 02A — 4/8
CAPCOM

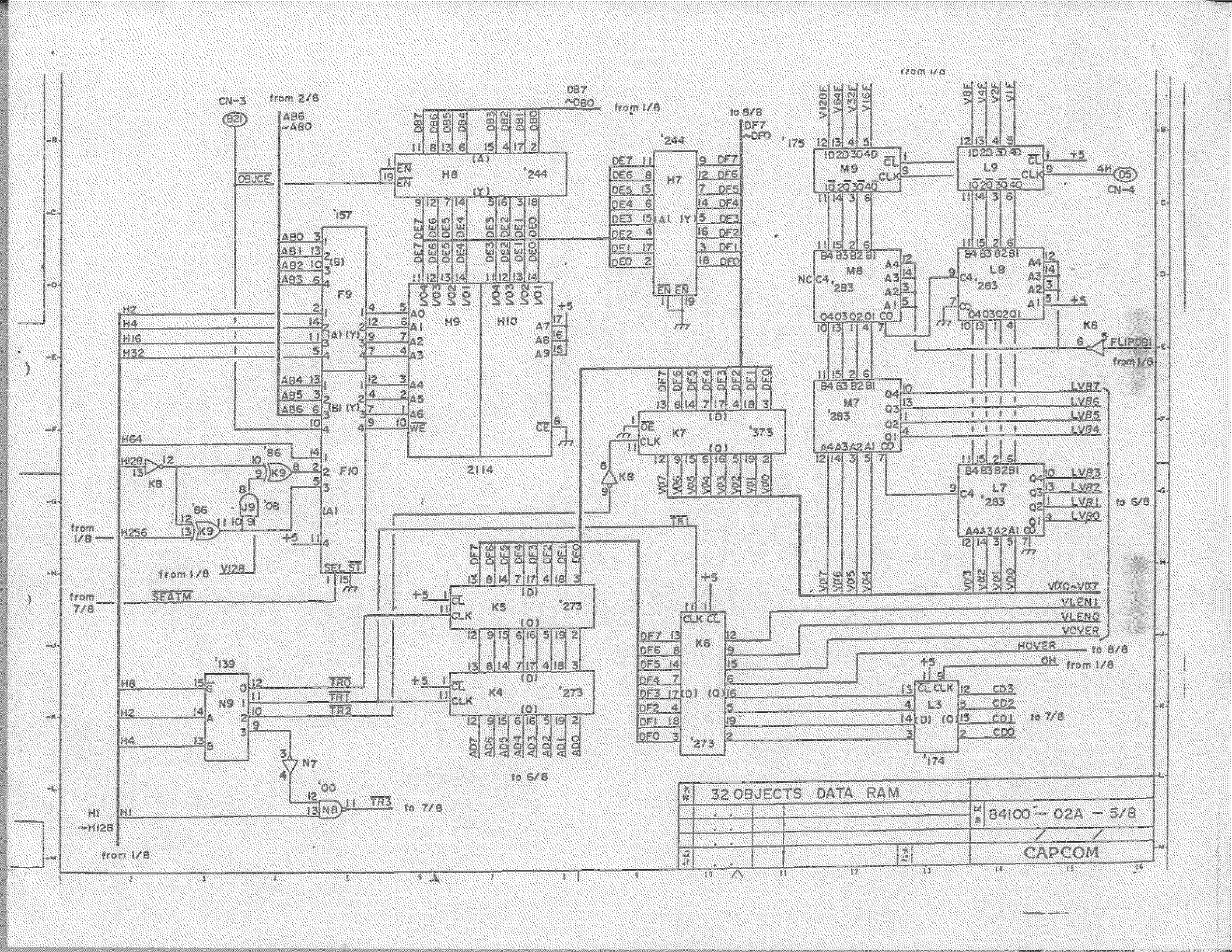
32 OBJECTS DATA RAM
84100 - 02A - 5/8
CAPCOM
CN-3
from 2/8
from 1/8
to 8/8
from 1/8
from 1/8
from 1/8
from 7/8
from 1/8
from 1/8
from 1/8
to 6/8
to 6/8
to 7/8
to 7/8
to 8/8
from 1/8
from 1/8
from 1/8
CN-4
FLIPOBI
OBJCE
SEATM
SEL ST
VI28
TR0
TR1
TR2
TR3
TR
VO0-VO7
VLEN1
VLEN0
VOVER
HOVER
OH
CD3
CD2
CD1
CD0
LV87
LV86
LV85
LV84
LV83
LV82
LV81
LV80
H1
~H128
H2
H4
H8
H16
H32
H64
H128
H256
AB0
AB1
AB2
AB3
AB4
AB5
AB6
~AB0
DB7
~DB0
DF7
~DF0
DE7
DE6
DE5
DE4
DE3
DE2
DE1
DE0
AD7
AD6
AD5
AD4
AD3
AD2
AD1
AD0
'244
'157
'244
'175
'283
'283
'283
'373
'273
'273
'273
'174
'139
'86
'08
'00
2114
+5
4H
05

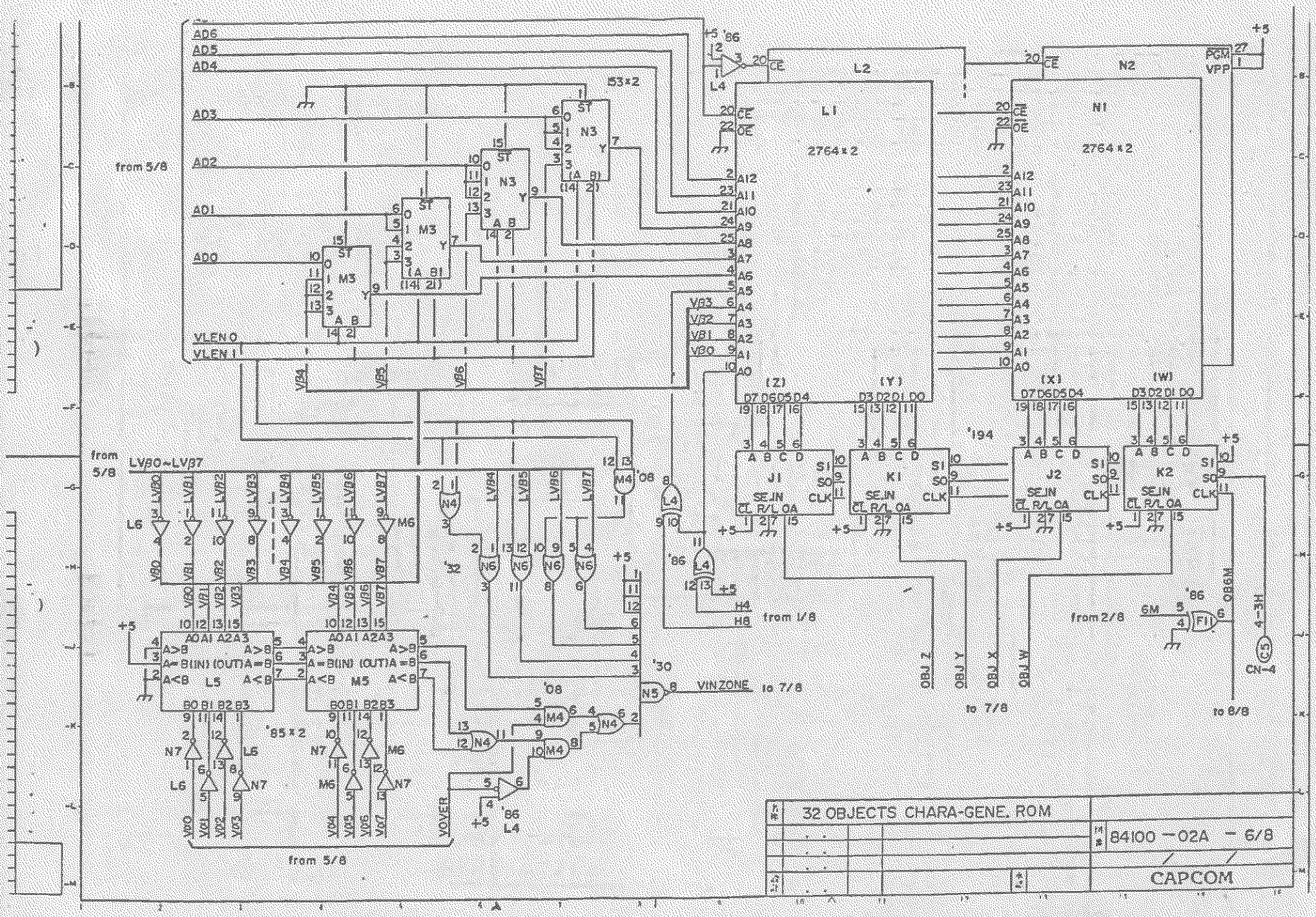
32 OBJECTS CHARA-GENE. ROM
84100 — 02A — 6/8
CAPCOM
L1
2764×2
L2
N1
2764×2
N2
'153×2
'85×2
'194
J1
K1
J2
K2
from 5/8
from 1/8
from 2/8
to 7/8
to 6/8
VIN ZONE
VOVER
OBJ Z
OBJ Y
OBJ X
OBJ W
OBJM
CN-4

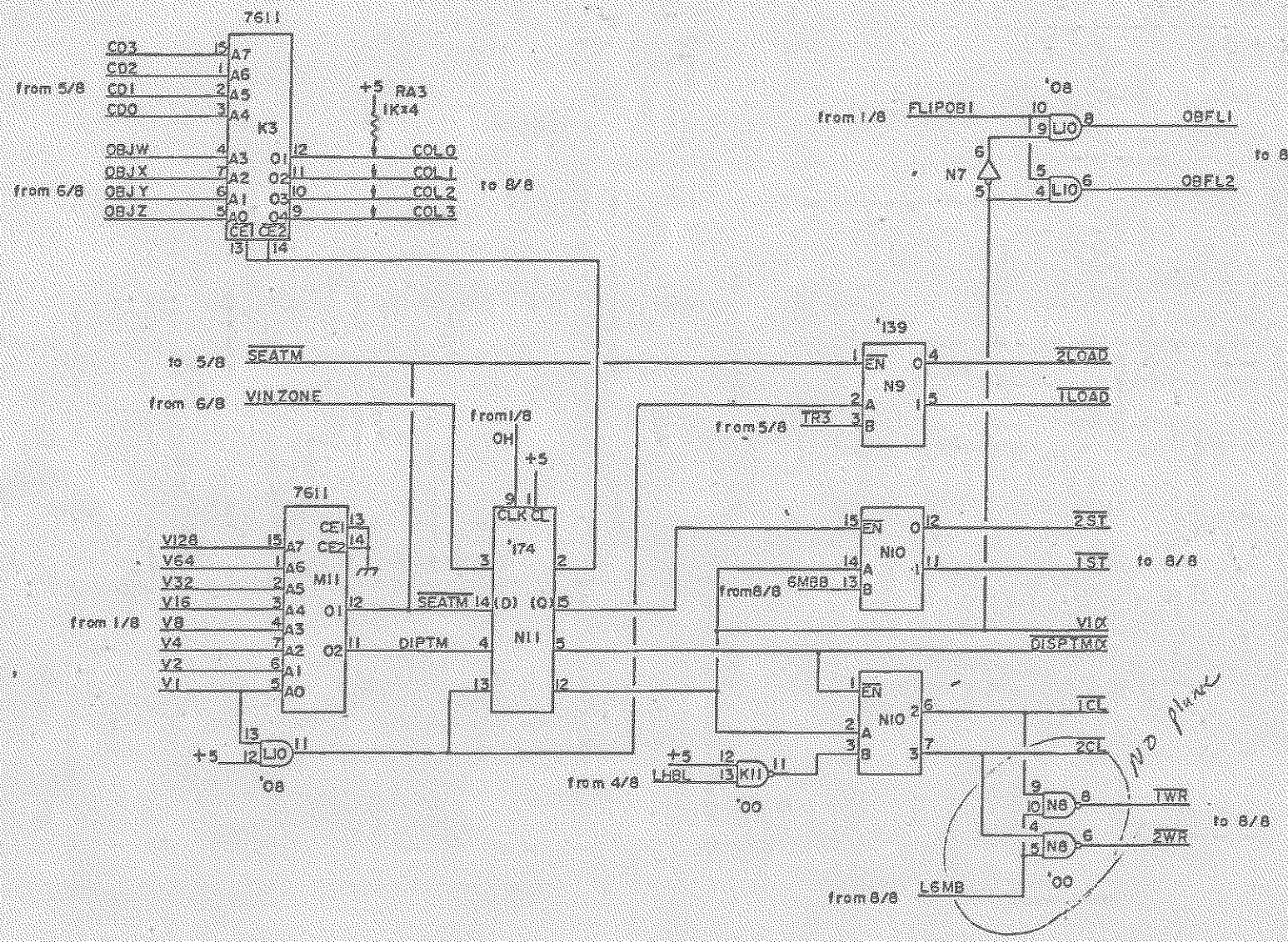

OBJ TIMING SEC		
		84100 — 02A — 7/8
		CAPCOM

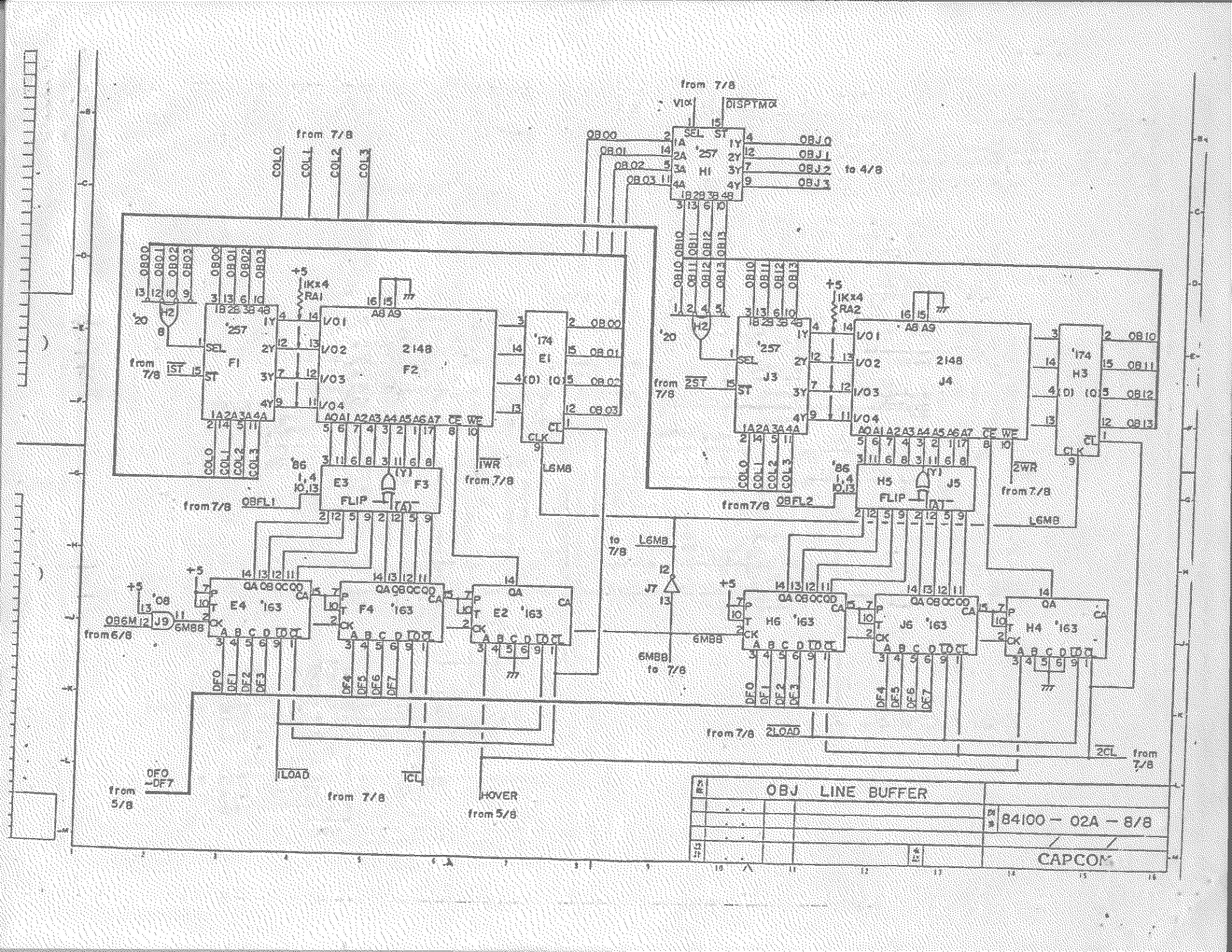
OBJ LINE BUFFER
84100 — 02A — 8/8
CAPCOM
from 7/8
from 5/8
from 6/8
to 4/8
to 7/8
'257
'174
'163
'08
'20
'86
2148
FLIP
1K x 4
+5